V01

INSTALLATION, OPERATION & MAINTENANCE MANUAL OF SMILE-M Series + SMILE-M-BAT-13.9P



DISCLAIMER

Copyright © AlphaESS Co., Ltd. 2024. All rights reserved.

No part of this document may be reproduced or transmitted in any form or by any means without prior written consent of Alpha ESS Co., Ltd.

The material furnished in this document is believed to be accurate and reliable. The information and recommendations in this document do not constitute commitments or warranties in the form of assignments. The information in this document is subject to change without notice. You may refer to the AlphaCloud Platform (https://cloud.alphaess.com) for the most updated version.

All company and brand products and service names are trademarks or registered trademarks of their respective holders.

COPYRIGHT STATEMENT

This manual is under the copyright of Alpha ESS Co., Ltd. with all rights reserved. Please retain this manual and operate the Product in accordance with all safety and operating instructions in this manual. Please do not operate the product before reading through the manual.

TABLE OF CONTENTS

DISCLAIMER 1

COPYRIGHT STATEMENT 2

TABLE OF CONTENTS 3

1. Introduction 7

1.1. Content and Structure of this Document 7

1.2. Target Group 7

1.3. Levels of Warning Messages 7

1.4. Definition of Abbreviations and Nouns 8

2. Safety 9

2.1. Intended Use 9

2.2. Battery Safety Instructions 9

2.2.1. General Safety Precautions 9

2.2.2. Response to Emergency Situations 10

2.3. Important Safety Instructions 11

2.4. Symbols Explanation 14

3. Product Introduction and Application Scenarios 17

3.1. Naming Convention 17

3.2. System Introduction 18

3.3. Product Description 18

3.3.1. Inverter Electrical Interface & Connections Introduction of SMILE-M10/M9/M8-S... 18

3.3.2. Inverter Electrical Interface & Connections Introduction of SMILE-M5/M3.6-S&M5-B20

3.3.3. Inverter Display Interface Introduction 21

3.3.4. Battery Display Interface Introduction 22

3.3.5. Battery Introduction of SMILE-M-BAT-13.9P 23

3.4. Application Scenarios 24

3.4.1. DC-Coupled Storage System 24
3.4.2. AC-Coupled Storage System 25
3.4.3. Hybrid-Coupled Storage System 25

4. Storage and Transport 27

4.1. Storage 27

4.1.1. Inverter Storage 27
4.1.2. Battery Storage 27

4.2. Transport 28

5. Mounting 29

5.1. Check the Outer Packaging 29

5.2. Scope of Delivery 29

5.3. Requirements for Mounting 31

5.3.1. Basic Requirements 32
5.3.2. Mounting Environment Requirements 32
5.3.3. Mounting Structure Requirements 33
5.3.4. Mounting Angle and Stack Requirements 33
5.3.5. Mounting Space Requirements 34

5.4. Preparing Tools and Instruments 34

5.5. Mounting the System 35

5.5.1. Mounting the 1st Battery SMILE-M-BAT-13.9P 35
5.5.2. Mounting the 2nd Parallel Battery SMILE-M-BAT-13.9P 36
5.5.3. Mounting the Inverter 38
5.5.4. Mounting the Wi-Fi Dongle 39

6. Electrical Connection 41

6.1. Cable Requirements for Connection 41

6.2. Grounding Connection 42

6.3. AC Connection 43

6.3.1. Requirements for the AC Connection 43
6.3.2. Select Suitable AC Circuit Breaker 44
6.3.3. Grid and Backup Connection 45

6.3.4. Disassembling Grid and Backup Connectors 48
6.3.5. CT Connection & Meter Connection & P1 Meter Reader Connection 48
6.4. PV Connection (Not for SMILE-M5-B-INV) 55
6.4.1. Connecting the PV Array 55
6.4.2. Disassembling the PV Connector 57
6.5. Communication Connection with Inverter 58
6.6. Mount Cover of the Inverter 59
7. Power on and off the System 61
7.1. Power on the System 61
7.2. Power off the System 61
8. Commissioning 63
8.1. Checks Before Power-On 63
8.2. Power on the Product before Commissioning 63
8.3. Installing New System and Setting up the App 64
8.3.1. Download and Install the App 64
8.3.2. Register as an Installer 64
8.3.3. Install New System on the App 64
8.3.4. Instruct the End User to Install the App 66
8.4. Wi-Fi Configuration and Basic Parameters 67
8.4.1. Wi-Fi Dongle Configuration 67
8.4.2. Basic Parameters Settings 69
8.4.3. Information on the main page 72
8.4.4. Function settings 73
8.5. Register on AlphaCloud 75
8.5.1. Register an Installer Account on AlphaCloud 75
8.5.2. Install New System on AlphaCloud 76
8.6. Check System Wiring and Meter Installation 77
8.7. Meter Setting 78
8.7.1. Meter Setting on Alpha Cloud 78
8.7.2. Meter Setting on the AlphaESS App 79

9. Maintenance and Troubleshooting 81

9.1. Routine Maintenance 81

9.2. Troubleshooting 82

9.2.1. Common Errors 82

9.2.2. Battery Protection Description for Series Battery 85

9.2.3. Battery Error Description 86

10. Product Removal & Return 87

10.1. Removing the Product 87

10.2. Packing the Product 87

10.3. Disposing of the Product 87

11. Technical Data 88

11.1. Datasheet of SMILE-M10/M9/M8-S Single Phase Inverter 88

11.2. Datasheet of SMILE-M5/M3.6-S&M5-B Single Phase Inverter 91

11.3. Datasheet of Battery 94

11.3.1. Datasheet of Battery SMILE-M-BAT-13.9P 94

Appendix 1: System Wiring Diagram 95

Appendix 2: Regional Application Standard 101

Appendix 3: Earth Fault Alarm Notification 102

1. Introduction

1.1. Content and Structure of this Document

This document is valid for SMILE-M single phase energy storage system, which includes inverter SMILE-M10/M9/M8/M5/M3.6-S&M5-B-INV and battery SMILE-M-BAT-13.9P.

This document describes the mounting, installation, commissioning, configuration, operation, troubleshooting and decommissioning of the energy storage system as well as the operation of the user interface.

Please read all documentation that accompanies the product. Keep them in a convenient place and available at all times.

Illustrations in this document are reduced to the essential information and may deviate from the real product.

1.2. Target Group

This document is intended for qualified persons. Only qualified persons are allowed to perform the operations marked with a warning symbol in this document.

Qualified personnel must have:

1. Knowledge of working principle of inverters.
2. Knowledge of how to deal with the dangers and risks associated with installing and using electrical devices, batteries and energy storage system.
3. Knowledge of the installation and commissioning of electrical devices and energy storage system.
4. Knowledge of the applicable standards and directives relevant to the product and its installation.
5. Understood and complied with this document, including all safety precautions.
6. Understood and complied with the documents of the battery manufacturer and inverter manufacturer, including all safety precautions.

1.3. Levels of Warning Messages

The following levels of warning messages may occur when handling the product.

DANGER DANGER indicates a hazardous situation that will result in death or serious injury if not avoided.
WARNING WARNING indicates a hazardous situation that could result in serious injury or even death if not avoided.

CAUTION CAUTION indicates a hazardous situation that could result in minor or moderate injury if not avoided.
NOTICE NOTICE indicates a situation that could result in property damage if not avoided.
INFORMATION provides tips which are valuable for the optimal installation and operation of the product.

1.4. Definition of Abbreviations and Nouns

A	
AC	Alternating Current
App	Application
AUX	Auxiliary
B	
BAT	Battery
BMS	Battery Management System
D	
DC	Direct Current
E	
EMS	Energy Management System
ESS	Energy Storage System
I	
INV	Inverter
P	
PV	Photovoltaic
S	
SOC	The State Of Charge

2. Safety

2.1. Intended Use

The inverter, batteries and electricity meters together form a system designed to optimise the self-consumption of electrical energy in a household. The inverter transfers energy between AC current and DC current while the battery is used for the storage of energy (typically storing surplus energy produced by solar arrays).

Inverter SMILE-M10/M9/M8/M5/M3.6-S&M5-B-INV and battery SMILE-M-BAT-13.9P are suitable for indoor and outdoor installation.
Inverter SMILE-M10/M9/M8/M5/M3.6-S must only be operated with PV arrays of protection class II in accordance with IEC 61730, application class A. The PV modules must be compatible with this product.

The product is not equipped with an integrated transformer and therefore has no galvanic isolation.

The product must not be operated with PV modules whose outputs are grounded. This can cause the product to be destroyed. The product may be operated with PV modules whose frame is grounded.

PV modules with a high capacity to ground must only be used if their coupling capacity does not exceed 1.0 µF.

All components must be used in a manner and environment in compliance with the requirements of this manual and in compliance with all relevant local Standards and directives. Any other operation may cause personal injury or property damage.

Alterations to the product, e. g. changes or modifications, are only permitted with the express written permission of AlphaESS. Unauthorized alterations will void the product warranty(s). AlphaESS shall not be held liable for any damage caused by such changes.

Any use of the product other than that described in the Intended Use section does not qualify as appropriate.

The enclosed documentation is an integral part of this product. Keep the documentation in a convenient place for future reference and comply with all instructions contained therein.

The type label must remain permanently attached to the product.

2.2. Battery Safety Instructions

2.2.1. General Safety Precautions

1. Before installing any part of the SMILE-M energy storage system, please read the Installation Manual completely. If additional hardware is being installed at the same time as the SMILE-M unit (e. g. a Backup device or a separate AC-coupled PV system), please read the Installation Manual for each component/system before commencing installation of any hardware. The installation of one piece of hardware may create

hazards for the installation of another piece of hardware – be sure to read all Manuals to understand the interaction and safety implications of the combined systems.
2. Overvoltage or incorrect wiring can damage the battery and cause deflagration, which can be extremely dangerous.
3. All types of battery breakdown may lead to electrolyte or flammable gas leakage.
4. The battery is not user-serviceable because there is high voltage in the device.
5. Read the label with Warning Symbols and Precautions on the right side of the battery.
6. Do not connect any AC conductors or PV conductors directly to the battery which should be connected only to the inverter.
7. Do not charge or discharge a damaged battery.
8. Do not damage the battery by dropping, deforming, impacting, cutting or penetrating it with a sharp object. Battery damage may cause a leakage of electrolyte or fire.
9. Do not expose the battery to an open flame.

2.2.2. Response to Emergency Situations

The battery is designed to prevent the danger caused by malfunction.

In the case of user exposure to the electrolyte or other internal materials of the battery cells, the list below details recommended actions dependent on the type of exposure:
1. Inhalation: Leave the contaminated area immediately and seek medical attention.
2. Eye injuries: Rinse eyes with running water for 15 minutes and seek medical attention.
3. Skin injuries: Wash the affected area thoroughly with soap and seek medical attention.
4. Ingestion: Induce vomiting and seek medical attention.

If a fire breaks out in the place where the battery is installed, please follow these methods:
1. Fire extinguishing methods:
(1) A Respirator is not required during normal operations.
(2) Use an FM-200 or CO_2 extinguisher for battery fire.
(3) In the case of a fire in the property but where the fire has not yet reached the battery, if it is safe to do so, use an ABC fire extinguisher and prevent the fire from reaching the battery.
2. Firefighting instructions
(1) If a fire occurs when charging the batteries, if it is safe to do so, disconnect the battery circuit breaker to shut off the power to the batteries.
(2) If the battery is not on fire yet, extinguish the fire before the battery catches fire.
(3) If the battery is on fire, do not try to extinguish it but evacuate people immediately.

WARNING

There may be a possible explosion when batteries are heated above 150 °C.

When the battery is burning, it leaks poisonous gases. Do not approach.

3. Effective ways to deal with accidents

(1) On land: Place damaged battery in a segregated place and call local fire department or technical service engineer.
(2) In water: Stay out of the water and don't touch anything if any part of the battery, inverter, or wiring is submerged.
(3) Do not use submerged battery again and contact an Alpha-Accredited or Battery-Accredited technical service engineer.

2.3. Important Safety Instructions

DANGER

Danger to life due to electric shock when live components or DC cables are touched

The DC cables connected to a battery or a PV module may be live. Touching live DC cables can result in serious injury or even death due to electric shock. To avoid this danger:

- Disconnect the inverter and battery from voltage sources and make sure it cannot be reconnected before working on the device.
- Do not touch non-insulated parts or cables.
- Do not disconnect the DC connectors under load.
- Wear suitable personal protective equipment for all work on the product.
- Observe all safety information of this document.

DANGER

Danger to life due to electric shock if live system components in backup mode are touched

Even if the grid circuit breaker and the PV switch of the inverter are disconnected, parts of the system may still be live when the battery is switched on due to backup mode. To avoid this danger:

- Before performing any work on the inverter, disconnect it from all voltage sources as described in this document.

DANGER

Danger to life due to electric shock if touching live components or DC cables when working on the battery

The DC cables connected to the battery may be live. Touching live DC cables can result in serious injury or even death due to electric shock. To avoid this danger:

- Before performing any work on the battery, disconnect the inverter from all voltage sources as described in this document.

DANGER

Danger to life due to electric shock if touching live components when the inverter or battery cover is open

High voltages are present in the live parts and cables inside the system during operation. Touching live parts and cables can result in significant injuries or even death due to electric shock. To avoid this danger:

- Do not open the system.

DANGER

Danger to life due to electric shock if live components are touched during a ground fault

When a ground fault occurs, parts of the energy storage system may still be live. Touching live parts and cables can result in significant injuries or even death due to electric shock. To avoid this danger:

- Disconnect the product from voltage sources and make sure it cannot be reconnected before working on the device.
- Touch the cables of the PV array on the insulation only.
- Do not touch any parts of the substructure or frame of the PV array.
- Do not connect PV strings with ground faults to the inverter.

DANGER

Danger to life due to electric shock if an ungrounded PV module or array frame is touched

Touching ungrounded PV modules or array frames can result in significant injuries or even death due to electric shock. To avoid this danger:

- Connect and ground the frame of the PV modules, the array mounting frame and the electrically conductive surfaces to ensure continuous conduction.
- Observe the applicable local regulations.

DANGER

Danger to life due to dangerous voltages on the battery

There is dangerous voltage at the terminal of the battery power cable. Reaching into the terminal of the battery power cable can result in a lethal electric shock. To avoid this danger:

- Do not open the battery cover.
- Leave the protective caps on the connectors for the battery's power connection until the inverter cables are connected to the battery.
- Disconnect the system from voltage sources and make sure it cannot be reconnected before working on the inverter or the battery.

WARNING

Risk of chemical burns from electrolyte or toxic gases

During normal operation, no electrolyte would leak from the battery and no toxic gases would form. Despite careful construction, if the battery is damaged or a fault occurs, it is possible that electrolyte may leak or toxic gases may form. To avoid this danger:

- Store the battery in a cool and dry place.
- Do not drop the battery or expose it to sharp objects.
- Protect the battery from mechanical damage from vehicles, tools and other objects.
- Only set the battery down on its back or its base.
- Do not open the battery.
- Do not install or operate the battery in a potentially explosive atmosphere or areas of high humidity.
- If moisture has penetrated the battery (e. g. due to a damaged housing), do not install or operate the battery.
- In case of contact with electrolyte, rinse the affected areas immediately with water and seek medical attention without delay.

WARNING

Danger to life due to burns caused by electric arcs through short-circuit currents

Short-circuit currents in the battery can cause heat build-up and electric arcs. Heat build-up and electric arcs may result in lethal injuries due to burns. To avoid this danger:

- Disconnect the battery from all voltage sources before performing any work on it.
- Observe all safety information of this document.

CAUTION

Risk of burns from the inverter's hot surface

The surface of the inverter can get extremely hot during operation, and touching it can result in burns. To avoid this danger:

- Correctly mount the inverter so that it cannot be inadvertently touched.
- Do not touch hot surfaces.
- Wait for 30 minutes for surfaces to cool down after switching the system off.
- Observe the safety messages on the inverter.
- During operation, don't touch any parts other than the display panel of the inverter.

CAUTION

Risk of injury due to weight of the inverter and battery

Injuries may be caused if the product is lifted incorrectly or dropped while being transported or mounted. To avoid this danger:

- Transport and lift the product carefully. Take the weight of the product into account. Use lifting and conveyance aids such as lifting trolleys wherever possible.
- Wear suitable personal protective equipment for all work on the product.

NOTICE

Damage to the inverter and battery due to electrostatic discharge

Touching electronic components can result in electrostatic discharge, which can damage or destroy the inverter and battery. To avoid this:

- Ground yourself before touching any component.

NOTICE

Damage due to cleaning agents or inappropriate cleaning methods

The use of cleaning agents may cause damage to the product and its components. To avoid this:

- Clean the product and all its components only with a cloth moistened with clear water.
- Never clean the unit with a hose or with the use of a water jet.

2.4. Symbols Explanation

Symbols on the type label of the energy storage inverter

Symbol	Explanation
	Beware of a danger zone This symbol indicates that the product must be additionally grounded if additional grounding or equipotential bonding is required at the installation site.
	Beware of electrical voltage The product operates at high voltages.

	Beware of hot surface The inverter can get hot during operation.
	Danger to life due to high voltages in the inverter; observe a waiting time of 5 minutes High voltages that can cause lethal electric shocks are present in the live components of the inverter. Prior to performing any work on the inverter, disconnect it from all voltage sources as described in this document.
	WEEE designation Do not dispose of the product together with the household waste but in accordance with the disposal regulations for electronic waste applicable at the installation site.
	Observe the documentations Observe all documentations supplied with the product.
	CE marking The product complies with the requirements of the applicable EU directives.
	RCM (Regulatory Compliance Mark) The product complies with the requirements of the applicable Australian standards.
	UKCA marking The product complies with the regulations of the applicable laws of England, Wales and Scotland.

Symbols on the type label and warning label of the battery

Symbol	Explanation
	Beware of a danger zone This symbol indicates that the battery must be additionally grounded if additional grounding or equipotential bonding is required at the installation site.
	Beware of electrical voltage The product operates at high voltages.
	**Corrosive substances warning** The product contains corrosive substances that can cause severe injury if they come into direct contact with the skin.
	Potentially explosive substances warning Improper handling or fire can cause the product to ignite or explode.
	Warning of hazards from batteries This symbol indicates the danger of handling batteries.

	Observe the documentations Observe all documentations supplied with the product.
	Refer to the instruction for operation Observe all documentations supplied with the product.
	Use eye protection Wear eye protection for all work on the device.
	No open flame Handling an open flame and sources of ignition is forbidden in the immediate vicinity of the product.
	Access is prohibited for all children To ensure safety, children should not operate or be near the battery system unless supervised by an adult.
	Do not short circuit Touching the short-circuit connection of the battery can result in serious injuries or even death due to electric shock and massive energy release.
	WEEE designation Do not dispose of the battery together with the household waste but in accordance with the locally applicable disposal regulations for batteries.
	CE marking The product complies with the requirements of the applicable EU directives.
UN38.3	Marking for transport of dangerous goods The product passes the certifications of the UN38.3.

3. Product Introduction and Application Scenarios

3.1. Naming Convention

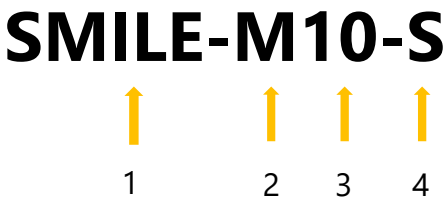

Position	Name	Explanation
1	SMILE	Residential energy storage system
2	M	M series for SMILE
3	10 9 8 5 3.6	10: The rated power is 10000 W 9: The rated power is 9000 W 8: The rated power is 8000 W 5: The rated power is 5000 W 3.6: The rated power is 3680 W
4	S B	Prefix S = Solar Connections (i.e. Hybrid) Prefix B = Battery Connections (i.e. AC)

Complete designation	Designation in this document
SMILE-M10-S-INV, SMILE-M9-S-INV, SMILE-M8-S-INV, SMILE-M5-S-INV, SMILE-M5-B-INV SMILE-M3.6-S-INV	Energy storage inverter
SMILE-M-BAT-13.9P	Parallel battery
SMILE-M10-S, SMILE-M9-S, SMILE-M8-S, SMILE-M5-S, SMILE-M5-B SMILE-M3.6-S	System/Energy storage system/BESS

3.2. System Introduction

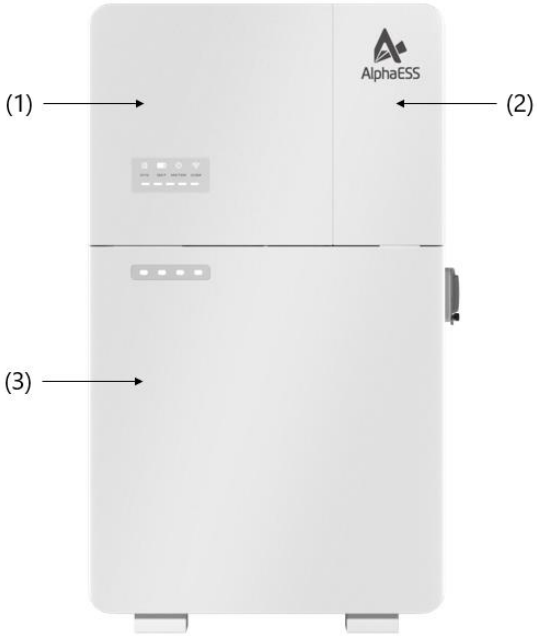

Figure 3-1 System product diagram

Position	Name	Explanation
1	SMILE-M10-S-INV, SMILE-M9-S-INV, SMILE-M8-S-INV, SMILE-M5-S-INV, SMILE-M5-B-INV SMILE-M3.6-S-INV	Energy storage inverter
2	Cable Cover	Covers for the right wiring area
3	SMILE-M-BAT-13.9P	Battery

3.3. Product Description

3.3.1. Inverter Electrical Interface & Connections Introduction of SMILE-M10/M9/M8-S

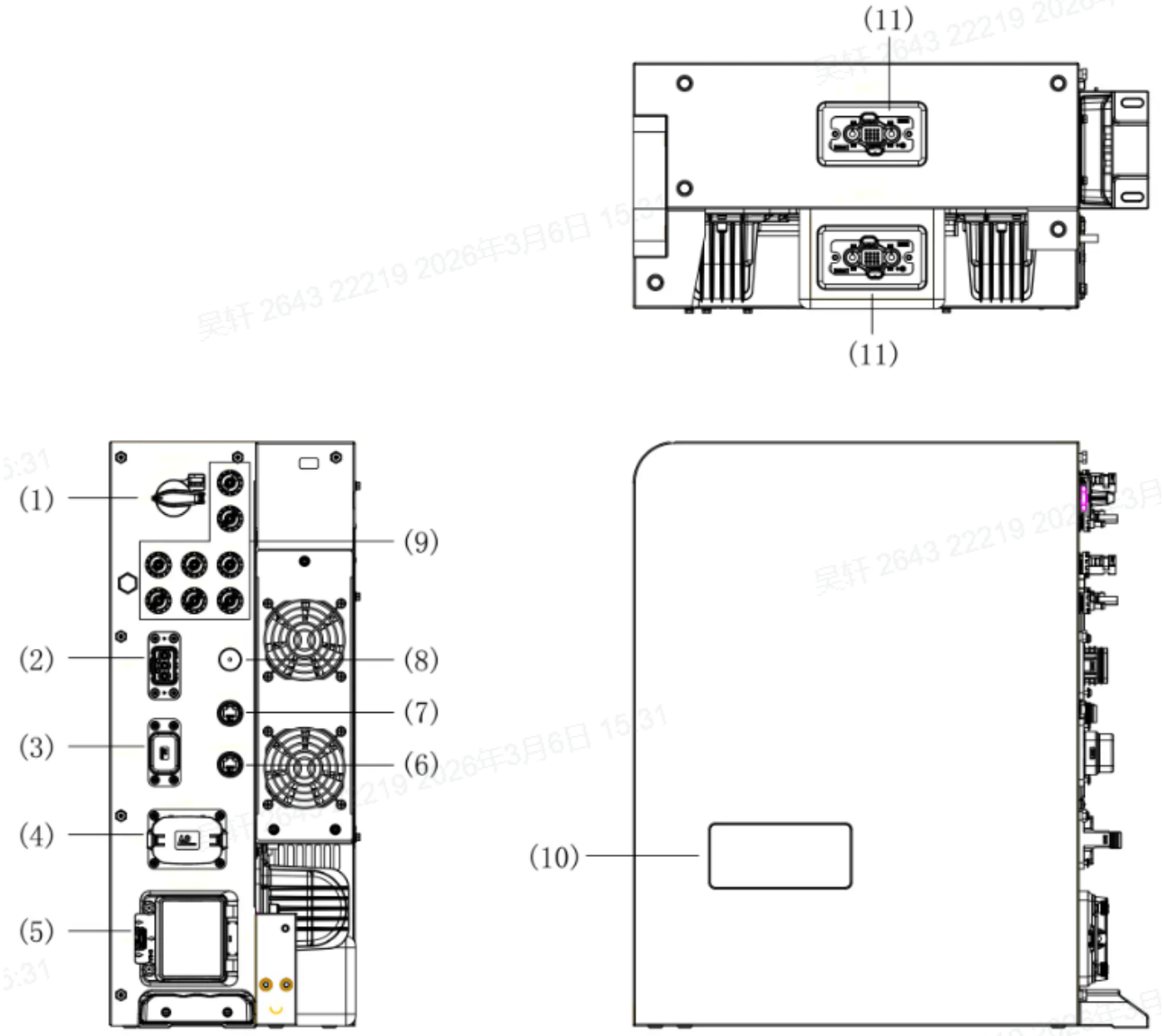

Figure 3-2 Inverter electrical interface diagram

Position	Designation
1	PV Switch*
2	Grid Connector (AC Supply)
3	Backup Connector
4	Communication Ports (RS485, DRM**&RRCR***, LAN, AUX and Para), Refer to Chapter 6.5
5	Battery Circuit Breaker*
6	Meter&Grid_CT Port
7	PV_CT Port
8	Wi-Fi Dongle Port
9	Positive and Negative PV Connectors, PV1 / PV2 / PV3 / PV4
10	LED Display
11	Battery Positive & Negative & COM Connector

* Battery circuit breaker and PV switch of the inverter are switched off when shipped.

** The DRM is only for regions with AS/NZW 4777.2 safety regulations.

*** The RRCR performs the corresponding maximum feed net percentage according to different signals.

3.3.2. Inverter Electrical Interface & Connections Introduction of SMILE-M5/M3.6-S&M5-B

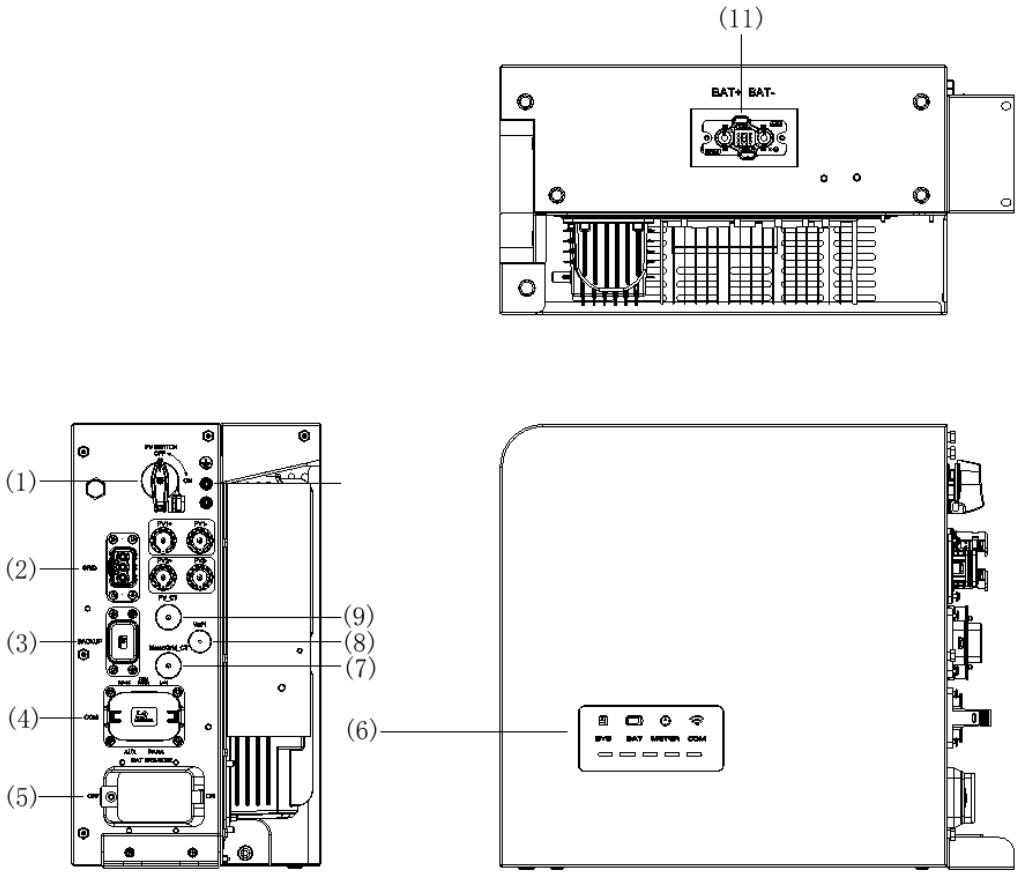

Figure 3-3 Inverter electrical interface diagram

Position	Designation
1	PV Switch*
2	Grid Connector (AC Supply)
3	Backup Connector
4	Communication Ports (RS485, DRM**&RRCR***, LAN, AUX and Para), Refer to Chapter 6.5
5	Battery Circuit Breaker*
6	LED Display
7	Meter&Grid_CT Port
8	Wi-Fi Dongle Port
9	PV_CT Port
10	Positive and Negative PV Connectors, PV1 / PV2 / PV3 / PV4*

11	Battery Positive & Negative & COM Connector

* Battery circuit breaker and PV switch of the inverter are switched off when shipped. PV Switch and PV Connectors are not for SMILE-M5-B-INV

** The DRM is only for regions with AS/NZW 4777.2 safety regulations.

*** The RRCR performs the corresponding maximum feed net percentage according to different signals

3.3.3. Inverter Display Interface Introduction

LED Display

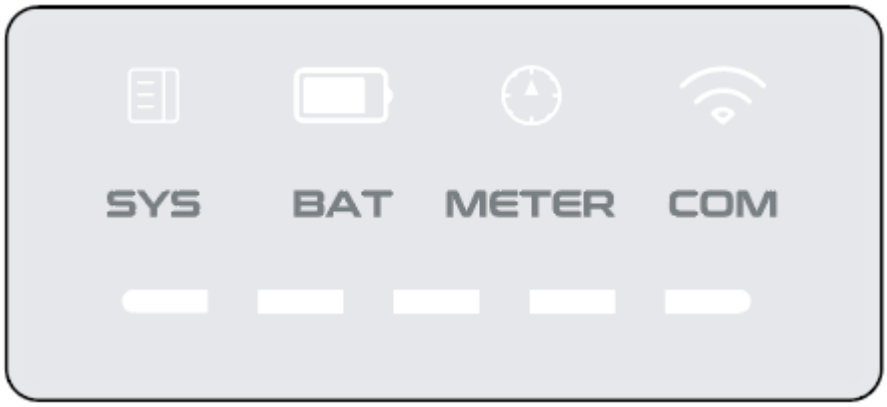

Figure 3-4 LED display

The upper four LED indicators are provided on the display panel. These LED indicators provide information about the operation status of the system.

Status	Explanation	Status	Explanation
	White light The system works normally		**White light** The battery works normally
	Red light The system is in fault		**No light** The battery is in fault
	White light Meter communication works normally		**White light** Connected to the server

	Flashing when SYS is white The system is in UPS mode **Flashing or No light when SYS is red** Meter lost		**No light** Disconnected to the server

The lower five LED indicators provide information about the State of Charge (SOC) of the batteries connected to this energy storage system.

Status	Explanation
	White LED is off
	White LED is flashing
	White LED is glowing

LED Indicator	SOC	Description
LEDs show the SOC of batteries		SOC≤5%
		5%＜SOC≤20%
		20%＜SOC≤40%
		40%＜SOC≤60%
		60%＜SOC≤80%
		80%＜SOC≤100%

Note that the LED lights provide an approximation of the State of Charge and should be read as an indication and not as a set value.

3.3.4. Battery Display Interface Introduction

During normal operation of battery, four LED indicators on the front cover provide information about the SOC of the battery with white lights on, off or flashing (0.5S on, 2.5S off).

Status	Explanation
	White LED is off
	White LED is flashing
	White LED is glowing

LED Indicator	No.	SOC	Description
LEDs show the SOC status	1		SOC≤5%
	2		5%＜SOC≤25%
	3		25%＜SOC≤50%
	4		50%＜SOC≤75%

	5		75%＜SOC≤100%

State Display:

The LEDs indicate the operating state of the product.

Standby: all white LEDs are flashing (0.5s on and 0.5s off).

Normal: white LEDs are glowing or flashing (0.5s on and 2.5s off).

Protection: yellow LEDs are glowing or flashing (0.5s on and 0.5s off).

Error: yellow LEDs are glowing or flashing (0.5s on and 0.5s off).

Shutdown: all LEDs are off.

3.3.5. Battery Introduction of SMILE-M-BAT-13.9P

Battery appearance and dimensions

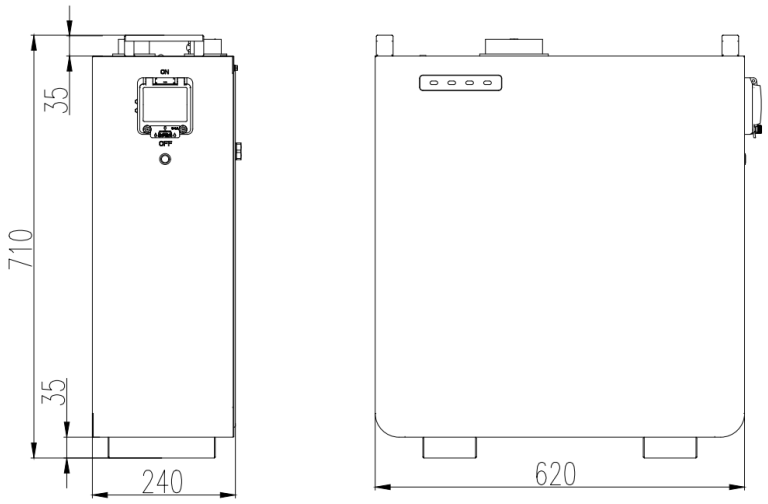

unit: mm

Figure 3-5 Battery appearance and size diagram

Connection area overview

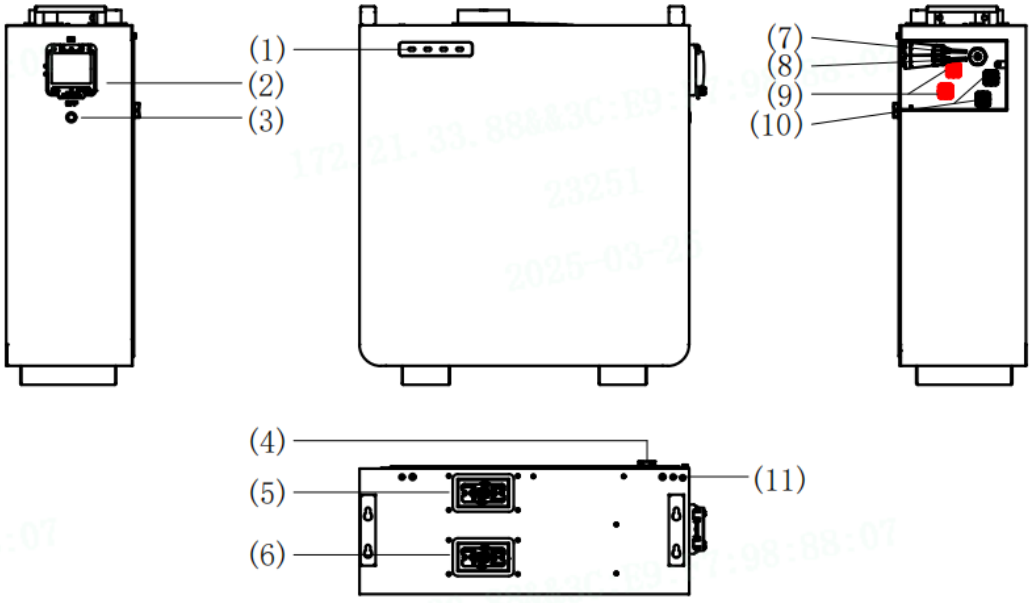

Figure 3-6 Battery connection area diagram

Position	Designation
1	LED Display
2	Battery Circuit Breaker
3	Battery Power Button
4	Pressure Relief Valve
5	Battery Positive & Negative Connector 2
6	Battery Positive & Negative & COM Connector 1
7	Expansion BMS COM1
8	Expansion BMS COM2 (with Termination Resistor)
9	Expansion BAT Positive Connector
10	Expansion BAT Negative Connector
11	Grounding Point

3.4. Application Scenarios

SMILE-M single phase system (comprise of the inverter SMILE-M10/M9/M8/M5/M3.6-S&M5-B-INV and battery SMILE-M-BAT-13.9P can be connected as a DC-Coupled systems (mostly new installation, not for M5-B), AC-Coupled systems (mostly retrofit) and Hybrid-Coupled systems (mostly retrofit, and increase the PV capacity) as shown in the following diagrams:

3.4.1. DC-Coupled Storage System

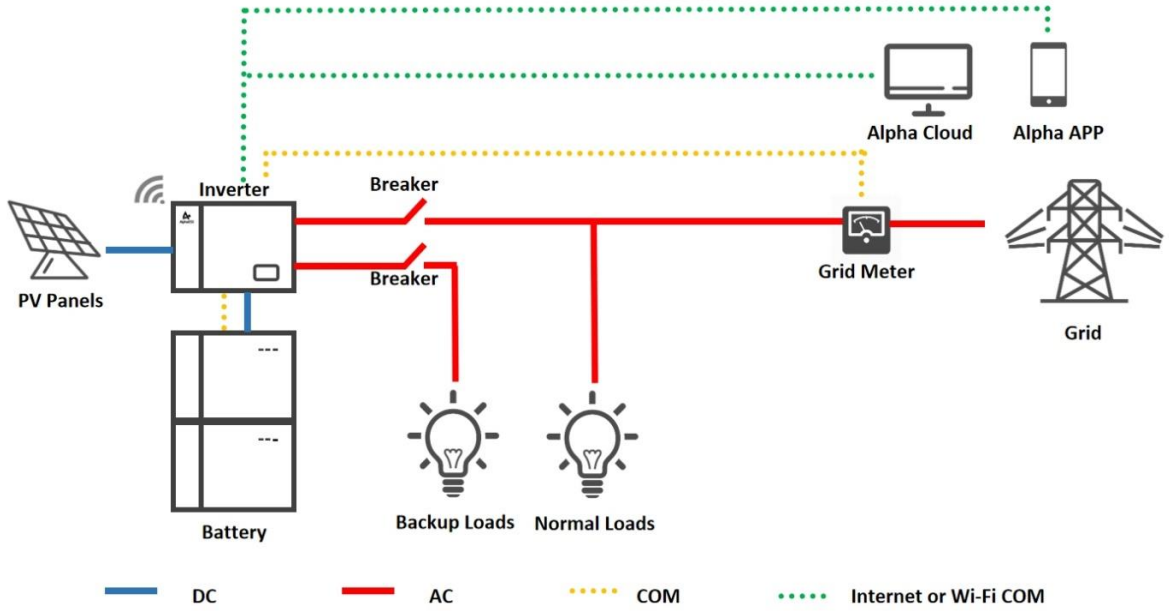

Figure 3-7 DC-Coupled Storage System – Scheme

3.4.2. AC-Coupled Storage System

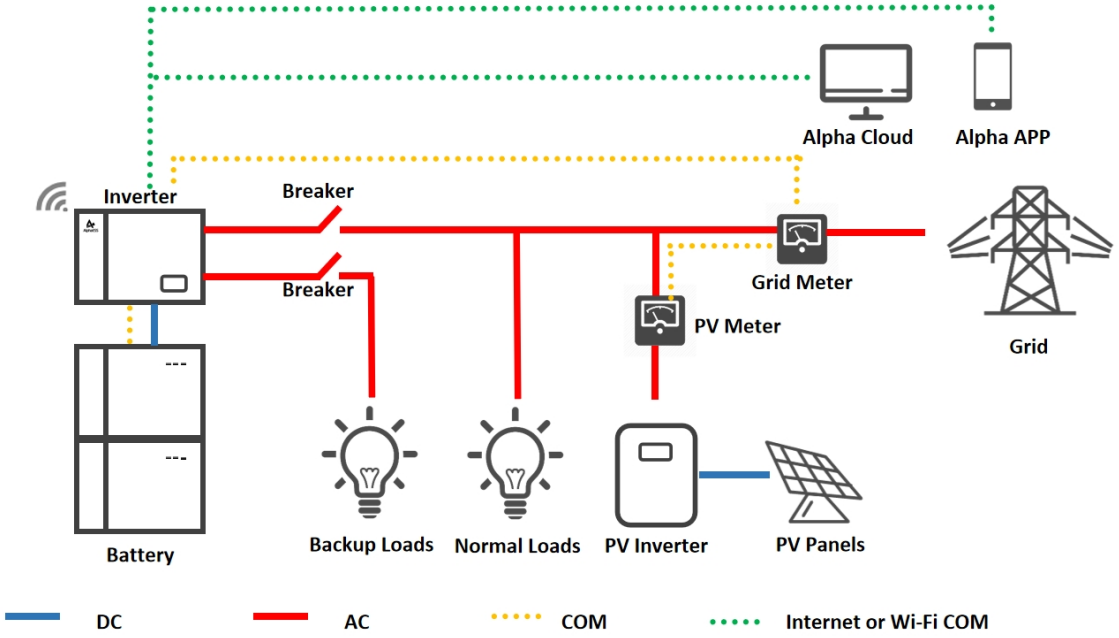

Figure 3-8 AC-Coupled Storage System – Scheme

3.4.3. Hybrid-Coupled Storage System

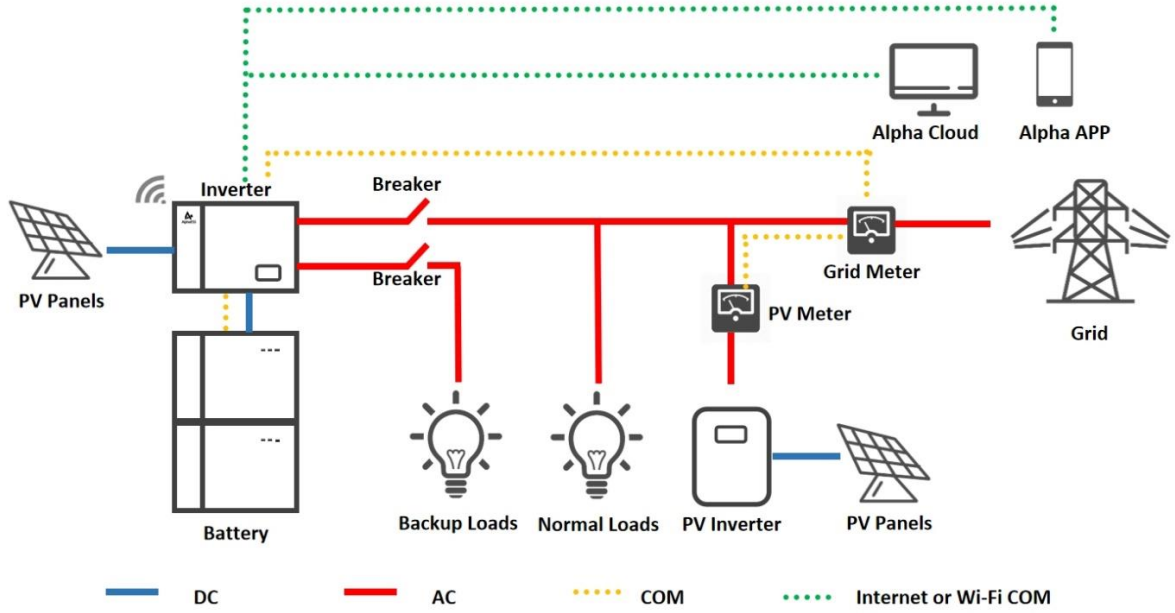

Figure 3-9 Hybrid-Coupled Storage System – Scheme

Note:

1. In all scenarios, Normal Loads and Backup Loads must be appropriately protected by earth fault protection devices (e. g. Type A or Type B RCDs, RCBOs) in accordance with appropriate standards.
2. If the system occurs an earth fault, please refer to Appendix 3
3. The product should not be installed in multiple phase combination, and external devices should be used in accordance with the requirements of AS/NZS 4777.1.

4. Storage and Transport

4.1. Storage

4.1.1. Inverter Storage

The following requirements should be met if the inverter is not put into immediate use:

1. Do not unpack the inverter.
2. Keep the storage temperature at -40~60°C and the humidity at 5%~95% RH.
3. The inverter should be stored in a clean and dry place and be protected from dust and water vapor corrosion.
4. A maximum of six inverters can be stacked. To avoid personal injury or device damage, stack inverters with caution to prevent them from falling over.
5. During the storage period, check the inverter periodically. Replace any damaged packaging promptly.
6. The inverters stored for more than 2 years should be inspected and tested before being put into service.

4.1.2. Battery Storage

The following requirements should be met if the battery is not put into immediate use:

4. Place batteries according to the signs on the carton during storage. Do not put the batteries upside down or store them horizontally.
5. Stack battery cartons in accordance with the stacking requirements printed on the external carton.
6. Store the battery out of reach of children and animals.
7. Store the battery in an area where there is minimal dust and dirt.
8. Handle batteries with care to avoid damage.
9. The requirements for the storage environment are as follows:

(1) Ambient temperature: -10~55°C, recommended storage temperature: 15~30°C.
(2) Relative humidity: 15%~85%.
(3) Place batteries in a dry, clean, ventilated location free from dust.
(4) Store batteries in a place that is away from corrosive organic solvents and gases.
(5) Keep batteries away from direct sunlight.
(6) Keep batteries at least 2 meters away from heat sources.

10. The batteries in storage must be disconnected from external devices and the indicators (if any) on the batteries should be off.
11. Warehoused batteries should be delivered based on the "first in, first out" stock control.
12. The warehouse keeper should collect battery storage information every month and report to the planning department. Batteries stored for more than 6 months should be

assessed and charged periodically.

13. Capacity loss may occur if a lithium battery is stored for a long time. After a lithium battery is stored for 12 months in the recommended storage temperature, the irreversible capacity loss rate is 3%~10%. It is recommended that batteries not be stored for a long period. If the batteries need to be stored for more than 6 months, it is recommended to recharge the batteries to 65~75% of the SOC.

4.2. Transport

During transportation, please follow these guidelines:

1. Use the original packaging for transportation. If the original packaging is not available, place the product inside a suitable cardboard box with adequate protection and seal the carton.
2. Handle with care, choose the corresponding handling method according to the weight, and pay attention to safety. Mechanical aids should always be used in preference to lifting by hand.

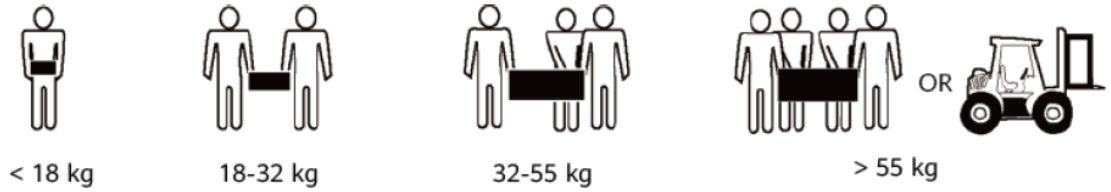

Figure 4-1 Handling methods for batteries of different weights

3. Keep the packaging dry and away from potential sources of damage during transportation.
4. Secure the product during transportation to prevent falling or mechanical impact.

5. Mounting

5.1. Check the Outer Packaging

Before unpacking the product, check the outer packaging for damage, such as holes, signs of mechanical damage or water damage. If any damage is found, do not unpack the product and contact your dealer as soon as possible.

5.2. Scope of Delivery

Check the scope of delivery and inspect components to ensure they are present and undamaged.

Contact your distributor if the packed components are incomplete or damaged.

SMILE-M10/M9/M8-S Single Phase Inverter				
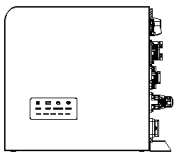		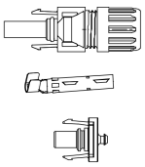	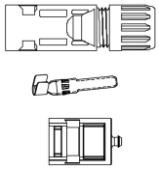	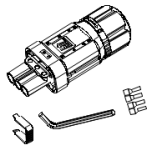
Inverter (×1)	Cable Cover (×1)	PV+ Connector (x4)	PV- Connector (x4)	Grid Plug Connector (×1)
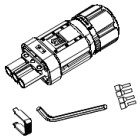	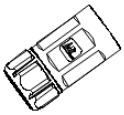	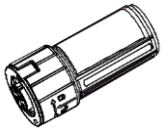	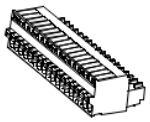	
Backup Plug Connector (×1)	RJ45 Plug Connector (x1)	WiFi Dongle (x1)	AUX Terminal Block (x1)	M5 Y Type Terminal (x3)
		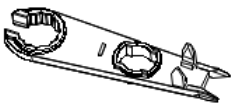	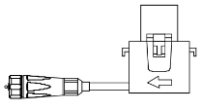	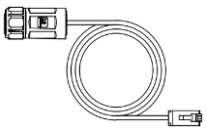
M5*14 Screws (x5)	Communication Cover (x1)	PV connector Disassembling Tool (x1)	Grid CT (x1)	Grid CT Cable (x1)
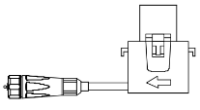	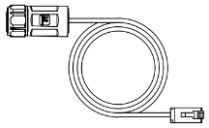			
PV CT (x1)	PV CT Cable (x1)	Document (x2)		

SMILE-M5/M3.6-S&M5-B Single Phase Inverter

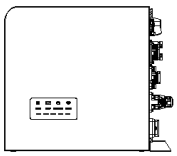		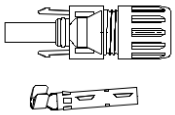	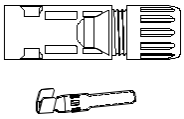	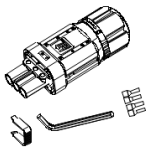
Inverter (×1)	Cable Cover (×1)	PV+ Connector* (x2)	PV- Connector* (x2)	Grid Plug Connector (×1)
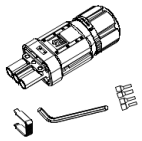	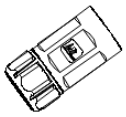		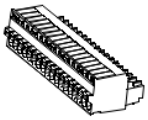	
Backup Plug Connector (×1)	RJ45 Plug Connector (x1)	WiFi Dongle (x1)	AUX Terminal Block (x1)	M5 Y Type Terminal (x3)
		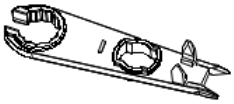	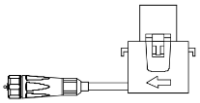	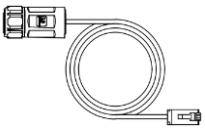
M5*14 Screws (x5)	Communication Cover (x1)	PV connector Disassem-bling Tool (x1)	Grid CT (x1)	Grid CT Cable (x1)
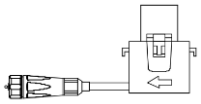	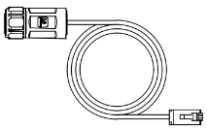			
PV CT (x1)	PV CT Cable (x1)	Document (x2)		

* Not for SMILE-M5-B-INV

SMILE-M-BAT-13.9P			
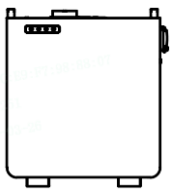	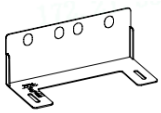		
Battery (×1)	Wall Bracket (×1)	Screws M5*14 (×3)	Wall Anchor (×4)
	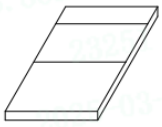	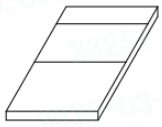	

Position Plate (×1)	Quick Installation Guide (×1)	SDS sheet (×1)	

(Optional) Battery Expansion Unit of SMILE-M-BAT-13.9P			
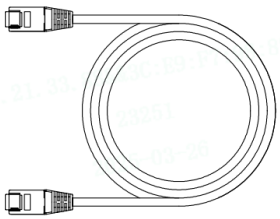	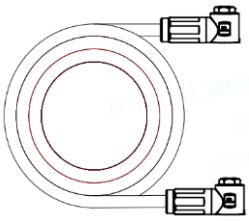	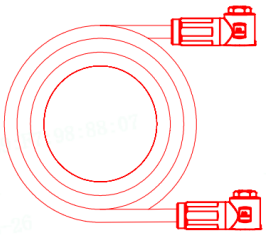	
Expansion Communication Cable (×1)	Expansion Positive Power Cable (×1)	Expansion Negative Power Cable (×1)	Top Cover (×1)
	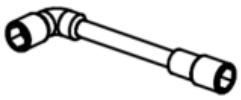		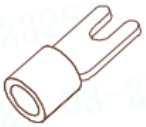
BAT Connector Cover Disassembling Tool (x1)	BAT Connector Tightening Tool (x1)	Screws M5*14 (×9)	Grounding Terminals (×3)
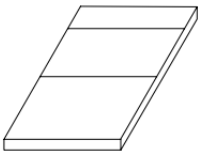		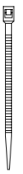	
Document (×1)	Fixed Plate (×2)	Zip Ties (×6)	

5.3. Requirements for Mounting

DANGER

Danger to life due to fire or explosion

Despite careful construction, electrical devices can cause fires.

- Do not mount the ESS in areas containing highly flammable materials or gases.
- Do not mount the ESS in potentially explosive atmospheres.

NOTICE

Operational Process Control: Our installation/uninstallation procedures strictly mandate that all circuit breakers must be switched off before any module disassembly. This procedural requirement eliminates the fundamental condition for arcing (live circuit interruption).

Mechanical & Electrical Design:

Battery modules are fixed with insulated screws and interlocked connectors, which physically prevent accidental disconnection under load. The mechanical fastening structure requires deliberate tool operation for disassembly, reducing the risk of inadvertent live separation.

The system operates at 48 V DC, a safety extra-low voltage (SELV) level below the 100 V threshold where arcing risk significantly increases

5.3.1. Basic Requirements

1. SMILE-M10/M9/M8/M5/M3.6-S&M5-B-INV and SMILE-M-BAT-13.9P are suitable for indoor and outdoor installation.
2. Do not install the ESS in a place where people can easily touch it because the inverter's surface will get extremely hot during operation.
3. Do not engage screws into tapped holes using a Hammer Driver, Impact Driver or "Rattle gun". Do not damage screws or threaded holes by tightening with too much torque.

5.3.2. Mounting Environment Requirements

DANGER

Danger to life due to fire or explosion

- Despite careful construction, electrical devices can cause fires.
- Do not mount the energy storage system in areas containing highly flammable materials or gases.
- Do not mount the energy storage system in potentially explosive atmospheres.

1. Do not mount the ESS outdoors in areas of high salt mist likelihood where corrosion may cause damage. An area of high salt mist likelihood refers to a region within 500 m from the coast or prone to the sea breeze.
2. Do not place the system near water sources such as downpipes or sprinklers.
3. The ESS must be mounted in a well-ventilated environment to ensure adequate heat dissipation.
4. Do not mount in a location that will be exposed to direct sunlight. Mount the ESS in a

sheltered place or mount an awning over it. When mounted under direct sunlight, the power of the ESS may be derated due to additional temperature rise and the longevity of the product will be reduced.

5. Favour locations that are indoors, under cover, or generally protected from the elements and extreme temperatures (e. g. in a garage). If the ESS is mounted in the garage, ensure the product is adequately protected from potential mechanical impact.
6. The optimal temperature range for the battery to operate is 15 to 30℃.

5.3.3. Mounting Structure Requirements

1. The surface to which the ESS is to be mounted shall be fire-rated where required by local regulations.
2. Out of an abundance of caution, it is recommended that the system be mounted on non-flammable building materials, even when not required by local regulations.
3. Ensure that the mounting surface is sufficiently sturdy to bear the weight of the Product, like a solid support surface (e.g., concrete or masonry).
4. In residential installation, do not mount the ESS on drywalls or walls made of gyprock or similar materials with poor sound insulation. The noises generated by the inverter can be noticeable and may be exacerbated by locations with poor insulation or where ech-oing may occur.
5. The mounting location must be suitable for the weight and dimensions of the product (see Section 5.3.5).

5.3.4. Mounting Angle and Stack Requirements

1. The battery should be placed on the ground and secured to the wall.
2. The inverter should be placed on the top of the battery and secured to the battery.
3. The installation angle requirement: do not mount the inverter at forward-tilted, side-tilted, horizontal, or inverted positions. Refer to

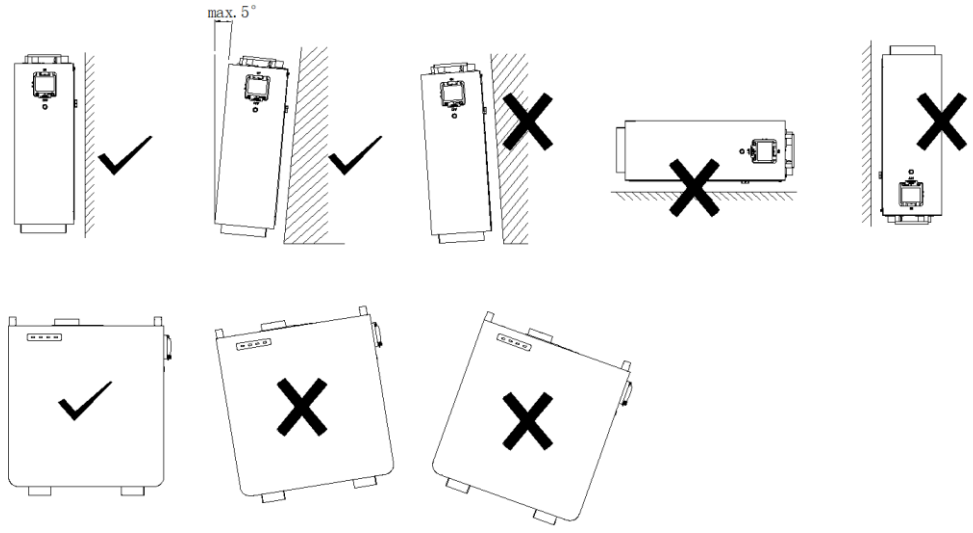

Figure 5-1 Product installation diagram

5.3.5. Mounting Space Requirements

1. Reserve sufficient space around the energy storage system to do installation, maintenance and heat dissipation.
2. The side clearance is a recommendation which can be adjusted according to the end-users requirements. Clearances may be up to 100 mm less than noted if ventilation is adequate and no restrictions or objects will limit access to the labelling or switches of the Product or to the use of tools to remove covers or service/remove the Product.

For Australia, according to ASNZ5139-2019-4.2.2.2, the non-combustible material needs to be placed between the wall and the battery unit and must extend 600 mm to the left and right of the battery and 900 mm above it.

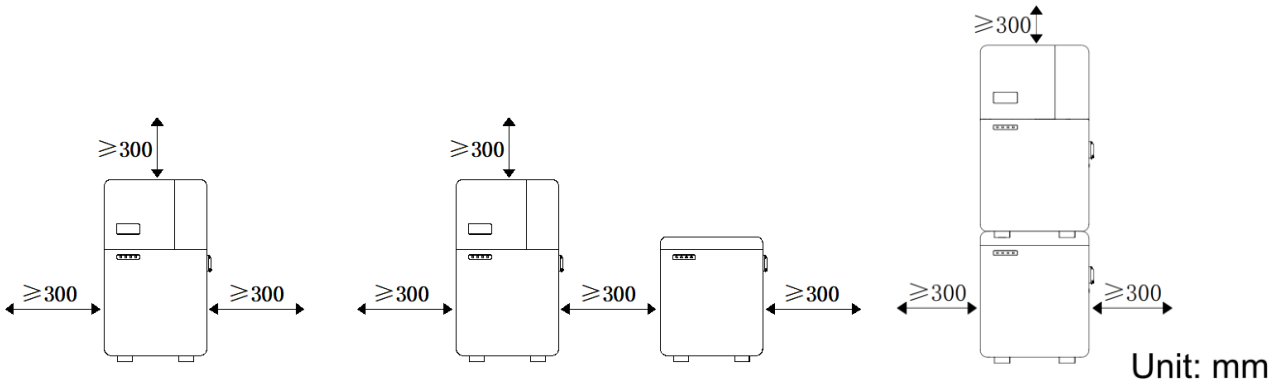

Figure 5-2 Installation space requirements

Note:

1. Up to two SMILE-M-BAT-13.9P are supported for floor-mounted installation in one column, meanwhile the installation should comply with the standard of AS5139.
2. Local Standards may add additional clearance requirements, particularly regarding clearances between the ESS and other Electrical Appliances.

5.4. Preparing Tools and Instruments

Category	Tools and Instruments		
Installation			
	Hammer drill (with a Φ10mm drill bit)	Torque socket wrench SW8&SW10	Multimeter (DC voltage range ≥ 1000V)
		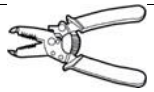	

	Diagonal pliers	Wire strippers	T20/PH2 screwdriver (torque range: 0-5Nm), L=150mm
			
	Rubber mallet	Utility knife	Cable cutters
	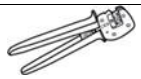	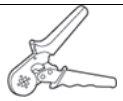	
	Crimping tool (model: PV-CZM-22100)	Bootlace/Ferrule terminal crimper	Connector removal wrench
		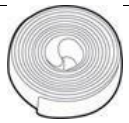	
	Vacuum cleaner	Heat shrink tubing	Heat gun
	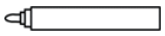		
	Marker	Measuring tape	Spirit level
Personal Protective Equipment			
	Safety gloves	Safety goggles	Anti-dust respirator
			
	Safety shoes		

5.5. Mounting the System

5.5.1. Mounting the 1st Battery SMILE-M-BAT-13.9P

When mounting the 1st battery SMILE-M-BAT-13.9P, please follow the below steps.

1. Take out the position plate in the battery package, and mark the drilling positions according to the hole of the plate. Then drill 2 holes on the wall with drill Φ10 and a depth greater than 70 mm, clean the holes and insert screw anchors into the drill holes. Refer to 1 in Figure 5-3.
2. Remove the battery from the carton and place it on the ground. Place the wall bracket onto the battery and align it with the positioning hole on the battery. The distance between battery and wall should range from 30 to 55 mm, which can be adjusted by the wall bracket. Secure the wall bracket on top of the battery (tool: T20 screwdriver, torque: 2.5 N·m). Refer to 2 in Figure 5-3.

3. Move the battery to the location matching the drilling hole on the wall. secure the wall bracket to the wall using the provided screws. (tool: SW8 Hexagon sleeve, torque: 6 N·m). Refer to 3 in Figure 5-3..

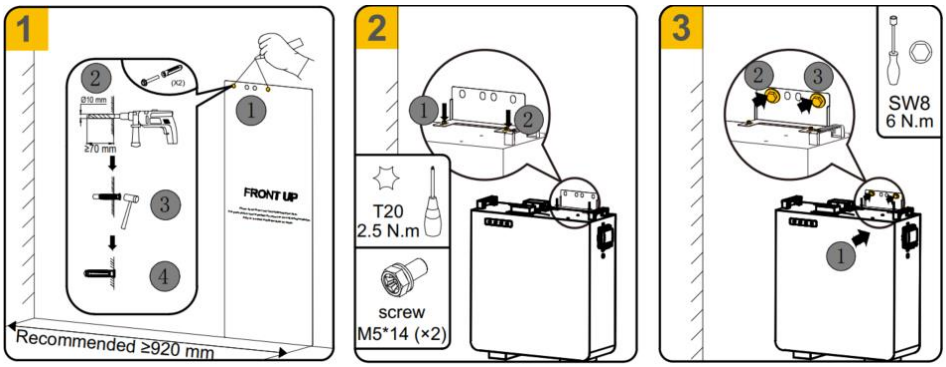

Figure 5-3 Battery Base Installation Steps Diagram

5.5.2. Mounting the 2nd Parallel Battery SMILE-M-BAT-13.9P

When mounting the 2nd SMILE-M-BAT-13.9P in side expansion, please follow the step 1~3 in Chapter 5.5.1

Note: The distance between the position plate and the mounted battery should be larger than 300 mm

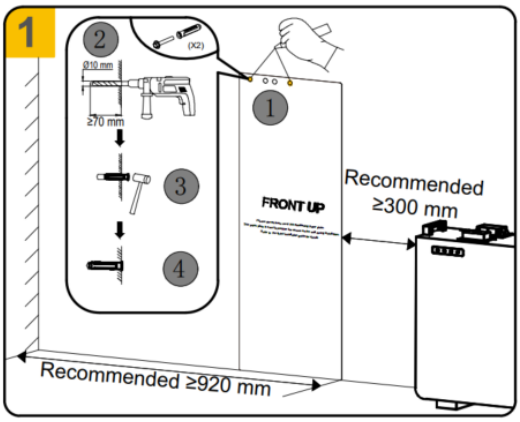

Figure 5-4 Battery top cover installation

When mounting the 2nd SMILE-M-BAT-13.9P in stacking, please follow the below steps.

1. Take out the top cover from the battery expansion package and place it on the 1st battery. Keep pressing the top cover, and secure four screws (two for each side) (tool: T20 screwdriver, torque: 2.5 N • m). Refer to step 1~5 of 1 in Figure 5-5.
2. Then take out the magnetic lids for stacking. Refer to step 6~7 of 1 in Figure 5-5.
3. Lift the 2nd battery onto the top cover and align the foot support of it with the hole on the top cover. Refer to step 5~6 of 2 in Figure 5-5.

4. Place the wall bracket onto the battery and align it with the positioning hole on the battery. Mark the drilling positions according to the hole of the plate and then remove it. Refer to step 11 of 2 in Figure 5-5.
5. Drill 2 holes on the wall with drill Φ10 and a depth greater than 70 mm, clean the holes and insert screw anchors into the drill holes. Then remove the dust cover. Refer to step 1~4 of 3 in Figure 5-5.
6. Place the wall bracket onto the battery and align it with the positioning hole on the battery. Secure the wall bracket on top of the battery (tool: T20 screwdriver, torque: 2.5 N·m). Refer to step 5~8 of 3 in Figure 5-5.

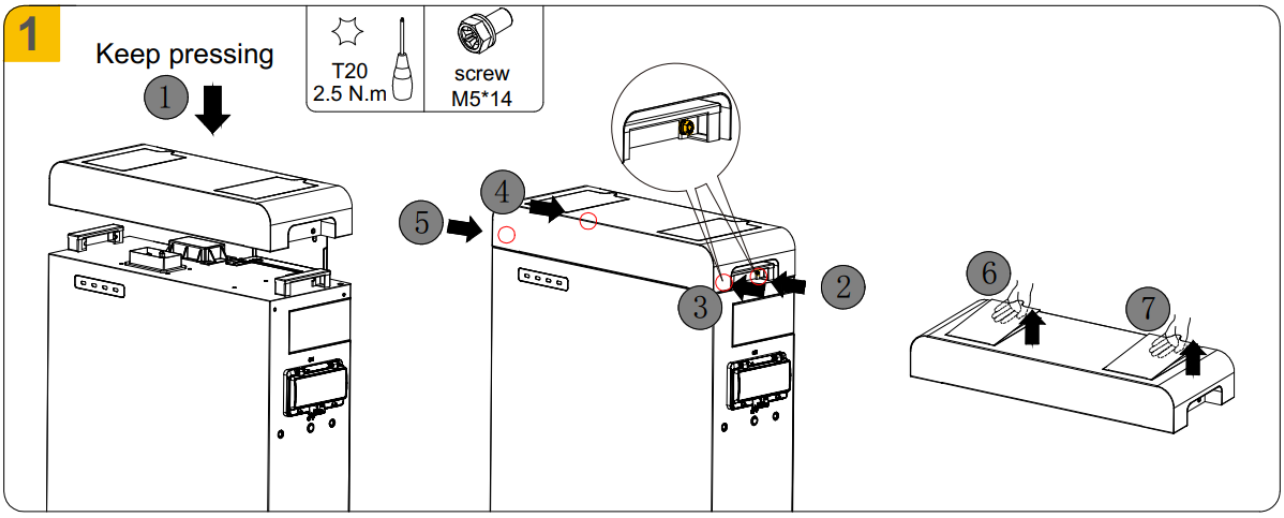

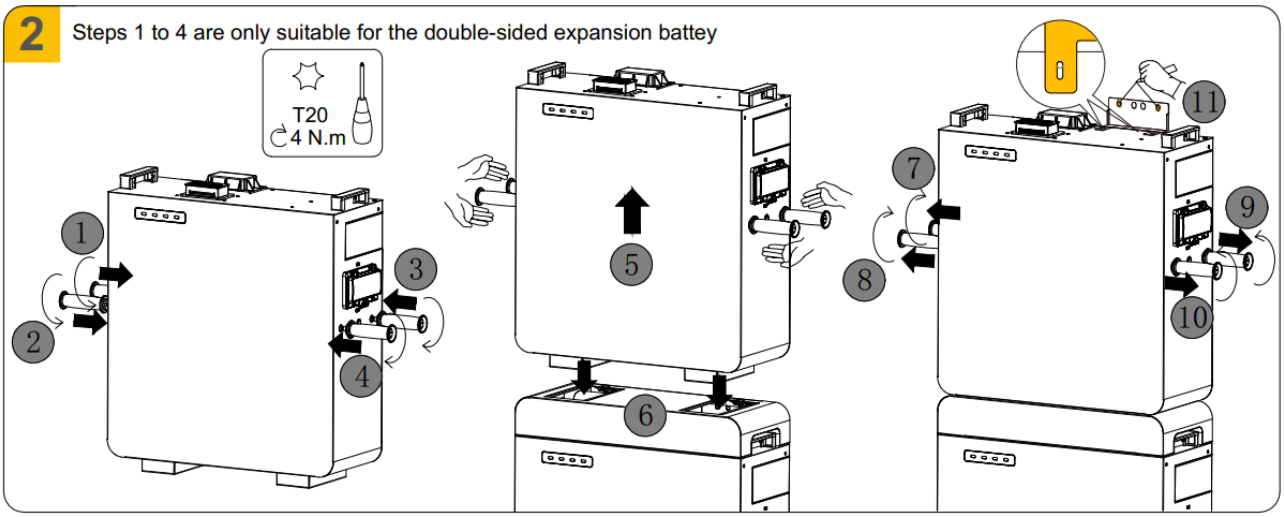

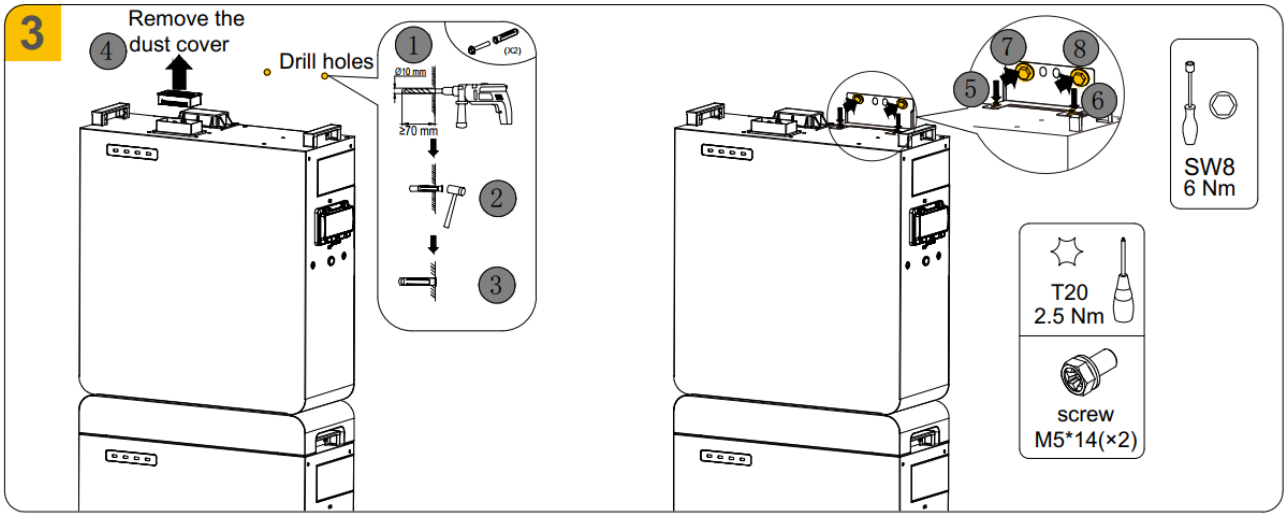

Figure 5-5 Battery top cover installation

When mounting the 2nd SMILE-M-BAT-13.9P forward, please follow the below steps.

1. Remove the battery from the carton and place it 30±2 mm forward the mounted battery. Refer to Figure 5-6
2. Take out the fixed plates in the battery package, and secure two (one fixed plate for each side) between each two batteries (tool: T20 screwdriver, torque: 2.5 N·m). Refer to Figure 5-6.

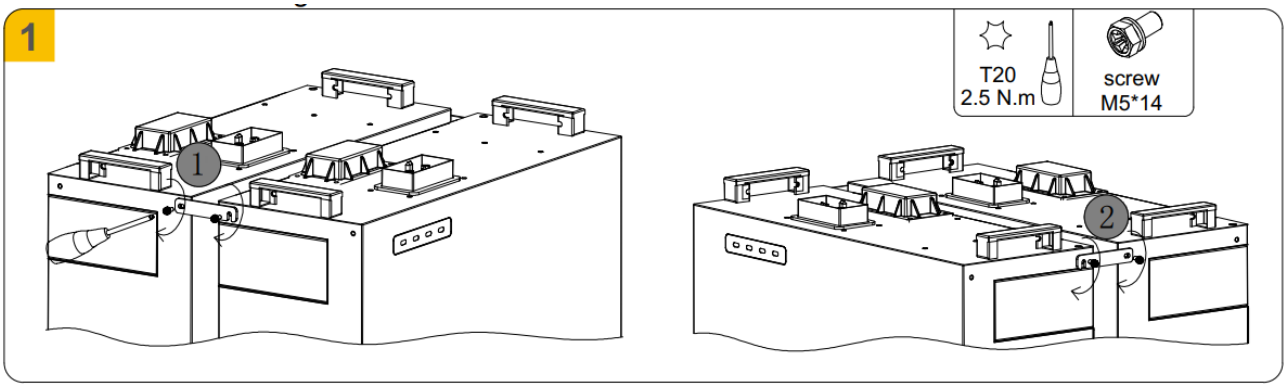

Figure 5-6 Battery top cover installation

5.5.3. Mounting the Inverter

When Mount the inverter SMILE-M5/M3.6-S&M5-B standing on the battery, detailed steps as follows:

1. Place the inverter onto the battery and tighten the left and right screws (two screws for each side). (tool: T20 screwdriver, torque: 2.5 N·m). Refer to Figure 5-7.

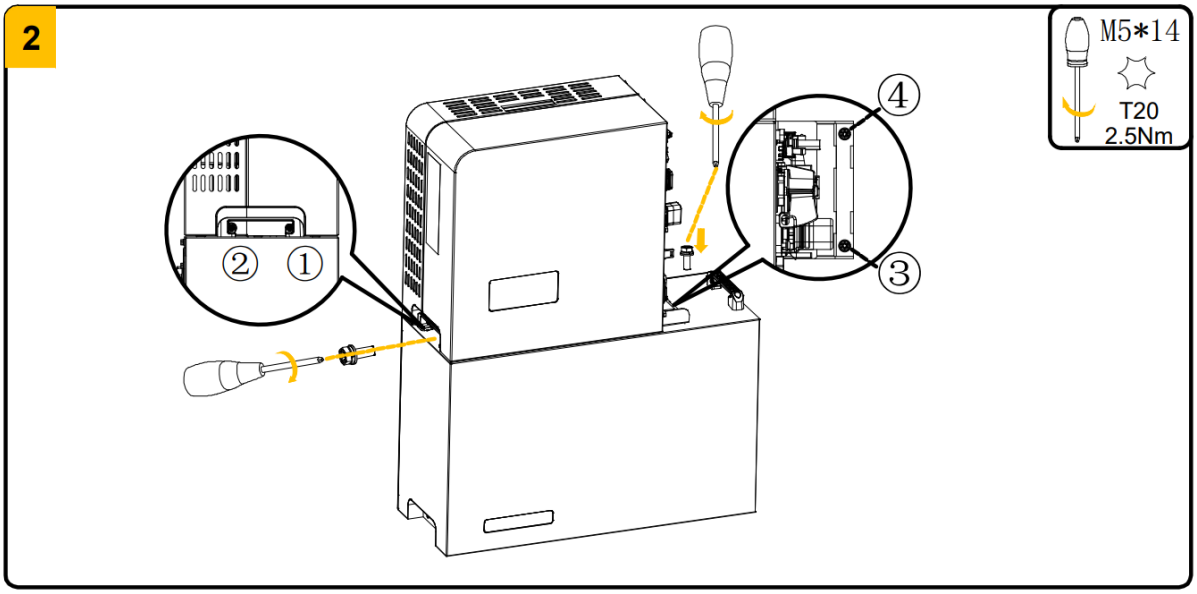

Figure 5-7 Inverter installation diagram

When Mount the inverter SMILE-M10/M9/M8-S standing on the battery, detailed steps as follows:

1. Before inverter stacking, please remove the behind cover of the SMILE-M-BAT-13.9P which is right under the inverter. (tool: T20 screwdriver). Refer to 1 in Figure 5-8
2. Place the inverter onto the battery and tighten the left and right screws (two screws for each side). (tool: T20 screwdriver, torque: 2.5 N·m). Refer to 2 in Figure 5-8.

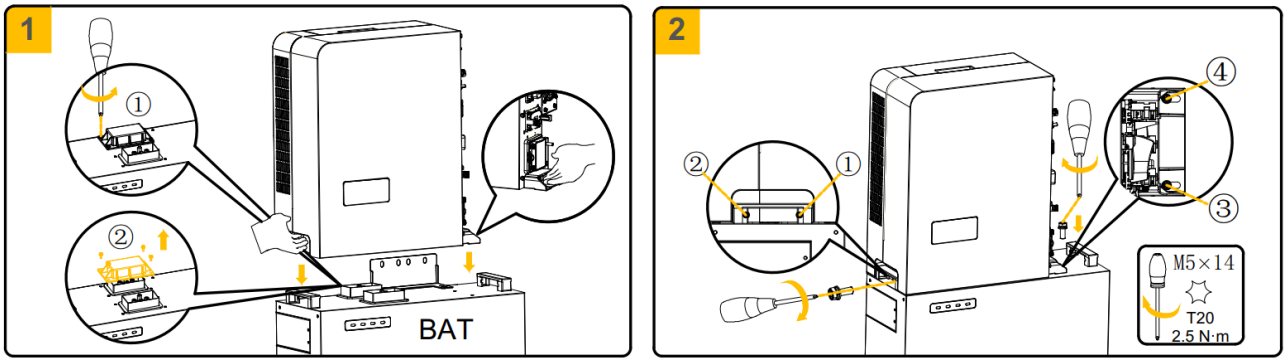

Figure 5-8 Inverter installation diagram

5.5.4. Mounting the Wi-Fi Dongle

Mount the Wi-Fi dongle at the Right of the inverter, detailed steps as follows:

1. Remove the protective cover of Wi-Fi port at the right of the inverter.
2. Insert the Wi-Fi dongle and rotate it to tighten it.

Note that AlphaESS always recommends a LAN cable connection over the use of a Wi-Fi dongle.

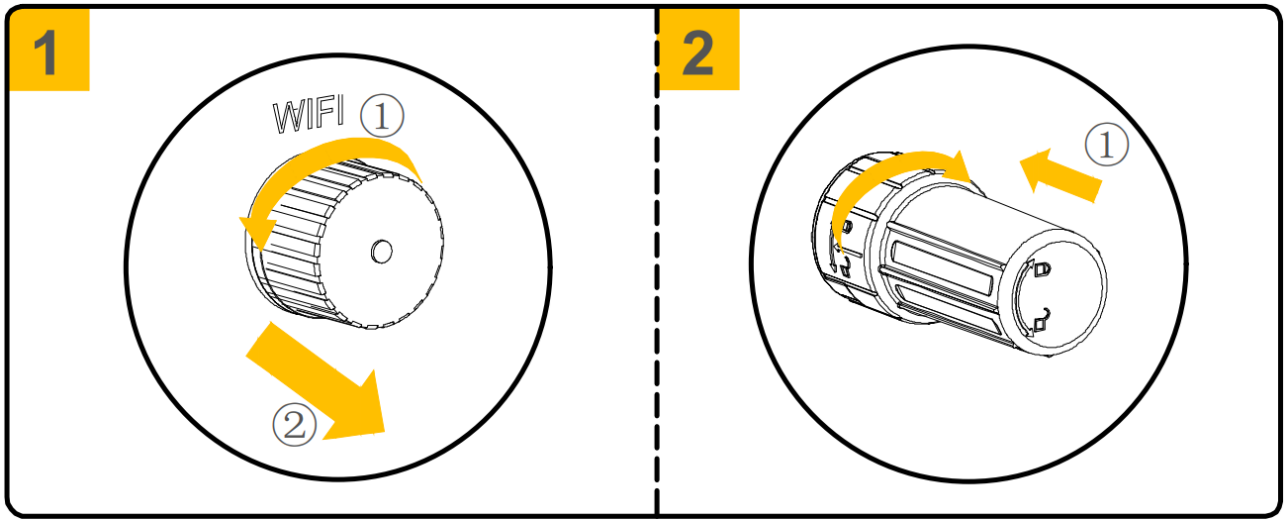

Figure 5-9 Installation diagram of Wi-Fi dongle

6. Electrical Connection

Precautions

DANGER

Electric Shock Hazard - Before connecting cables, switch OFF all breakers and switches connected to the inverter and batteries.

CAUTION

- Damage to the energy storage system caused by incorrect cable connections is not covered under warranty.
- Only certified electricians accredited by AlphaESS are allowed to connect cables.
- Appropriate PPE must be worn when installing or connecting the Product.

NOTICE

The cable colors shown in the electrical connection diagrams provided in this chapter are for reference only.

Select cables in accordance with local cable specifications (green-and-yellow cables are only used for PE).

6.1. Cable Requirements for Connection

No.	Cable	Type	Conductor Cross Section Area Range	Outer Diameter	Source
1	PV power cable	Standard PV cable (recommended type: H1Z2Z2-K)	4~6 mm^2	5.5~9 mm	Prepared by the installer
2*	Signal cable	Standard network cable (recommended type: Cat5e, SFTP, UV-resistant for outdoor use)	0.12~0.2 mm^2 (AWG26~AWG24)	4~6 mm	Prepared by the installer
3**	Signal cable	Two-core outdoor shielded twisted pair copper cable	0.5~1.5 mm^2	4~6mm	Prepared by the installer
4***	Signal cable	Outdoor shielded twisted pair copper cable	0.5~1.3 mm^2	4~6 mm	Prepared by the installer

5	AC power cable for backup	Three-core (L, N and PE) outdoor copper cable	4~6 mm^2 for M5/M3.6-S&M5-B 10~16 mm^2 for M10/M9/M8-S	12~18 mm	Prepared by the installer
6	AC power cable for grid	Three-core (L, N and PE) outdoor copper cable	4~6 mm^2 for M5/M3.6-S&M5-B 10~16 mm^2 for M10/M9/M8-S	12~18 mm	Prepared by the installer
7	PE cable	Single-core outdoor copper cable	2.5~10 mm^2	N/A	Prepared by the installer

*Signal cable for CAN/RS485, LAN, Meter (with CT), DRM.

**Signal cable for three-phase meter (without CT).

***Signal cable for AUX.

6.2. Grounding Connection

CAUTION

Electric Shock Hazard

Before doing electrical connection, please ensure the PV switch & all AC and BAT circuit breakers in the energy storage system are switched OFF and cannot be accidentally or unintentionally reactivated.

For SMILE-M5/M3.6-S&M5-B, two grounding points are provided near the pv switch on the energy storage inverter.

For SMILE-M10/M9.M8-S, two grounding points are provided near the bat breaker on the energy storage inverter.

Prepare M5 Eye/Ring terminals, strip the grounding cable insulation, insert the stripped conductor into the ring terminal lug and crimp with a crimping tool.

Connect the grounding terminal to the inverter using the T20 screwdriver with a torque of 2.5 Nm.

Grounding connection for the energy storage inverter.

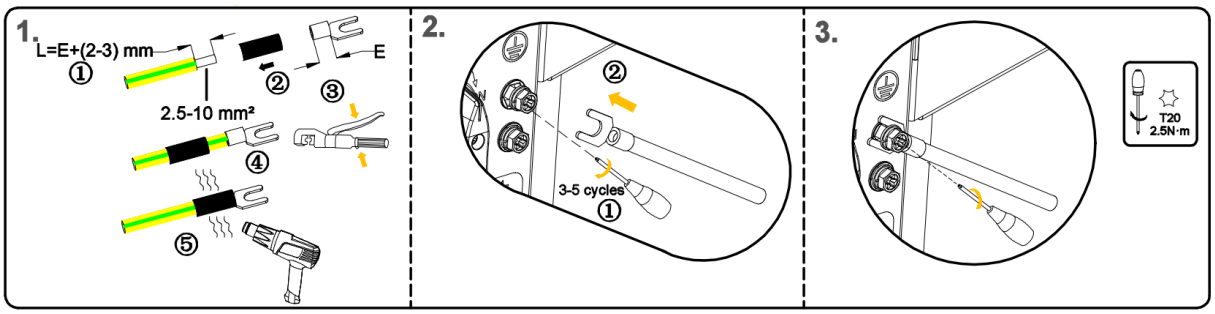

Figure 6-1 Grounding connection of the energy storage inverter

6.3. AC Connection

6.3.1. Requirements for the AC Connection

AC cable requirements as follows:

1. Conductor type: copper conductor (tinned copper preferred).
2. Current carrying capacity depends on the Model selected and should be such that.

The AC cable can carry the full current of the AC supply and the Backup output:

Example for 10 kW inverter model (SMILE-M10-S-INV).

AC Supply Max. current = 63 A

Backup Output Max. current: 63 A.

Note: Account for temperature derating and voltage drop/rise when selecting wire diameters. 110 °C or higher rated cable derates slower as temperatures increase.

Description	External diameter	Conductor cross-section	Insulation stripping length	Sheath stripping length
Grid connector	18~24 mm	4~6 mm^2 for M5/M3.6-S&M5-B 10~16 mm^2 for M10/M9/M8-S	16 mm	45 mm
Backup connector	18~24 mm	4~6 mm^2 for M5/M3.6-S&M5-B 10~16 mm^2 for M10/M9/M8-S	10 mm	33 mm

DANGER

You must protect each inverter with an individual grid/backup circuit breaker in order to ensure that the inverter can be disconnected safely.

CAUTION

Residual-current monitoring unit

The inverter is equipped with an all-pole sensitive residual-current monitoring unit in accordance with IEC/EN 62109-2 and VDE 0126-1-1. The all-pole sensitive residual-current monitoring unit monitors AC and DC residual currents.

It disconnects the inverter redundantly from the utility grid in the event of residual current jumps of > 30 mA. If the residual current monitoring unit malfunctions, the inverter is

immediately disconnected from the utility grid at all poles. If the protection by automatic disconnection of supply according to DIN VDE 0100-410 is fulfilled by an appropriate overcurrent protective device, the inverter does not require an external residual-current device for safe operation. If local regulations require the use of a residual-current device, the following must be observed:

- The inverter is compatible with type A and B residual-current devices. The rated residual current of the residual-current device must be 30 mA or higher. Each inverter in the system must be connected to the utility grid via a separate residual-current device.
- When using residual-current device with a lower rated residual current, there is a risk of false tripping of the residual-current device, depending on the system design.

6.3.2. Select Suitable AC Circuit Breaker

The general requirements for the selection of circuit breakers are determined by standards and country-specific provisions. The following factors should be considered when selecting a suitable circuit breaker:

1. Factors influencing the current-carrying capacity of the cable: type of cable used, ambient temperature around the cable, type of cable routing, bundling of cables.
2. Other influencing factors: loop impedance, mutual heating of circuit breakers, ambient temperature at the circuit breaker, selectivity, type of connected device.
3. If these factors are ignored, it will increase the risk of the circuit breaker tripping under normal operating conditions.
4. Selecting Circuit Breakers for the AC supply and Backup output is dependent on the maximum current of the backup circuit and the inverter (if it is force-charged), the model of MCBs used and their derated current rating considering their maximum temperatures. Supplier Datasheets detail temperature derating for their MCBs. Ensure the MCBs used are appropriate for the current and the operating temperature. Otherwise, the risk of the circuit breaker tripping will increase under normal operating conditions.

AC connection recommendation for SMILE-M3.6-S-INV

Description	Rated Current	Breaker Type	Recommend cable cross section
Grid Side	16 A	25 A	4 ~ 6 mm^2
Backup Side	16 A	25 A	4 ~ 6 mm^2

AC connection recommendation for SMILE-M5-S-INV

Description	Rated Current	Breaker Type	Recommend cable cross section
Grid Side	21.7 A	32 A	6 mm^2
Backup Side	21.7 A	32 A	6 mm^2

AC connection recommendation for SMILE-M5-B-INV

Description	Rated Current	Breaker Type	Recommend cable cross section
Grid Side	21.7 A	32 A	6 mm^2
Backup Side	21.7 A	32 A	6 mm^2

AC connection recommendation for SMILE-M8-S-INV

Description	Rated Current	Max. Current (grid input and backup bypass)	Breaker Type	Recommend cable cross section
Grid Side	34.7 A	63 A	63 A	10~16 mm^2
Backup Side	34.7 A	63 A	63 A	10~16 mm^2

AC connection recommendation for SMILE-M9-S-INV.

Description	Rated Current	Max. Current (grid input and backup bypass)	Breaker Type	Recommend cable cross section
Grid Side	39.1 A	63 A	63 A	10~16 mm^2
Backup Side	39.1 A	63 A	63 A	10~16 mm^2

AC connection recommendation for SMILE-M10-S-INV

Description	Rated Current	Max. Current (grid input and backup bypass)	Breaker Type	Recommend cable cross section
Grid Side	43.4 A	63 A	63 A	10~16 mm^2
Backup Side	43.4 A	63 A	63 A	10~16 mm^2

6.3.3. Grid and Backup Connection

Note:

1. For Australia and New Zealand installation site, the neutral cables of grid side and backup side must be connected together, otherwise backup output function will not work normally.
2. The PE Wire of Backup terminal is also not required for Australia and New Zealand.

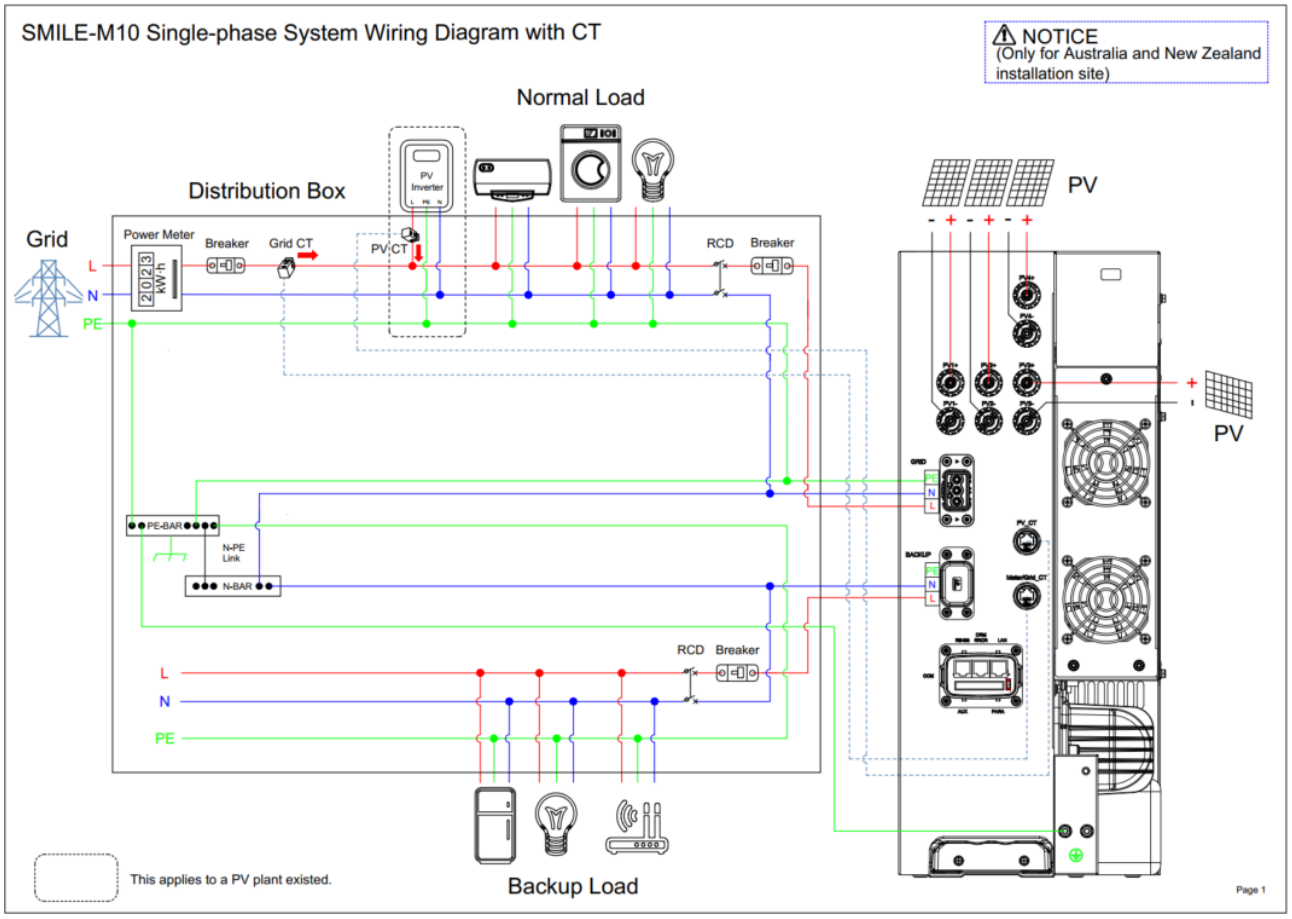

Figure 6-2 Wiring diagram

WARNING

Use AlphaESS App or AlphaCloud to select the current rating of the circuit breaker used to protect the AC cable connecting to the inverter

The BESS is programmed to limit the battery charge rate (from the grid) depending on the backup circuit current and the size of the MCB used. This avoids the risk of the backup circuit combining with a force-charge or VPP charge and pulling too much current through the grid-supply AC cable/MCB.

Note that an Automatic Transfer Switch can be used to bypass the battery AC cable and backup connection if preferred. In this case, the current on the Backup Output plug will be 0 A until there is a power outage. This means that the MCB on the AC supply to the battery only needs to be sized for the maximum current rating of the inverter (i. e. 21.7 A for a 5 kW inverter).

The combined current of the Battery Grid-charge and the backup circuit will be limited to the current rating of the MCB less 2 A (to account for the temperature derating of a typical MCB). Installers must advise AlphaESS if the MCB used has a steeper derating factor where the 2A buffer would not be sufficient.

Example: If a 32A MCB is used and the backup circuit is drawing 15 A, any force charging of the battery will be limited to (32 A-2 A) – 15 A = 15 A. If the load on the backup circuits

drops to 11 A, the maximum grid-charge current would increase to 19 A.

Where the wire diameter used for the AC connection to or from the battery inverter exceeds the maximum wire diameter for the grid connector plug below (e. g. if a long cable run is required and Voltage Rise Calculations require a wire of greater than 10 mm^2), use an intermediary connection point close to the battery to downsize the wire. Ensure that the short-run wire type is appropriate for the current and temperature (e. g. 180 °C Silicone flex will carry much greater current than vs 90 °C PVC) and use an intermediate MCB at the intermediary connection point if required.

The steps for connecting the grid connector as follows:

1. Disconnect the PV switch, grid, backup and battery circuit breaker and secure them to prevent reconnection.
2. Dismantle the AC cable by 46 ± 2 mm.
3. Strip the insulation of L, N and the grounding conductor 16 ± 1 mm.
4. Insert the three conductors into the screw terminals on the bush insert and tighten the screws using the torque 2.0 N·m with provided tool. Ensure that all conductors are securely in place in the screw terminals on the bush insert.
5. Insert the threaded sleeve into the bush insert and hear the "click" sound. Screw the swivel nut onto the threaded sleeve.
6. Insert the connector plug into the socket for the grid connection, making sure to align the key on the grid connection socket to the keyway on the bush insert of the grid plug connector.

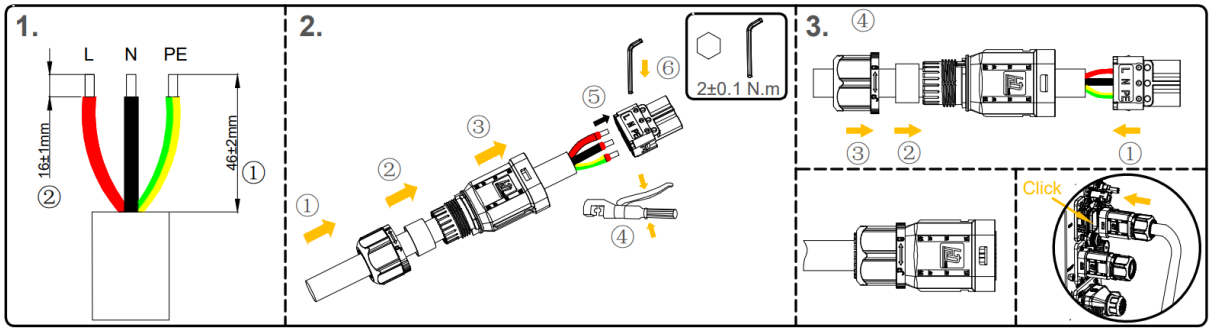

Figure 6-3 Grid connection steps diagram

The above wiring steps are also suitable for backup connection. The only difference is that the backup port is already blocked with a cover. If you want to connect the backup connector, please first remove the cover by the tool included in the package.

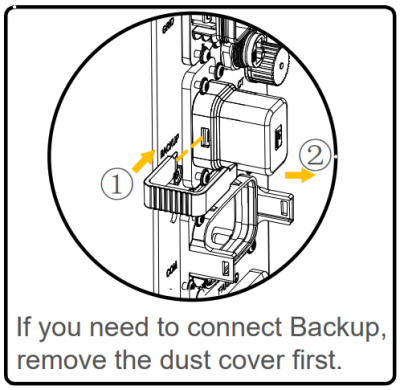

Figure 6-4 Backup connector installation

6.3.4. Disassembling Grid and Backup Connectors

Disassemble the grid or backup connector (e. g. due to faulty assembly), proceed as follows:

1. Align the screwdriver with the release position and press and hold. Hold the thread and pull back to remove the connector.
2. The cable female connector is separated from the board connector.
3. Hold the release buckle in one hand and follow the directions indicated. Rotate, turn the nut in the opposite direction in one hand
4. Use a screwdriver to peel off the red circles on both sides, complete disassembly.

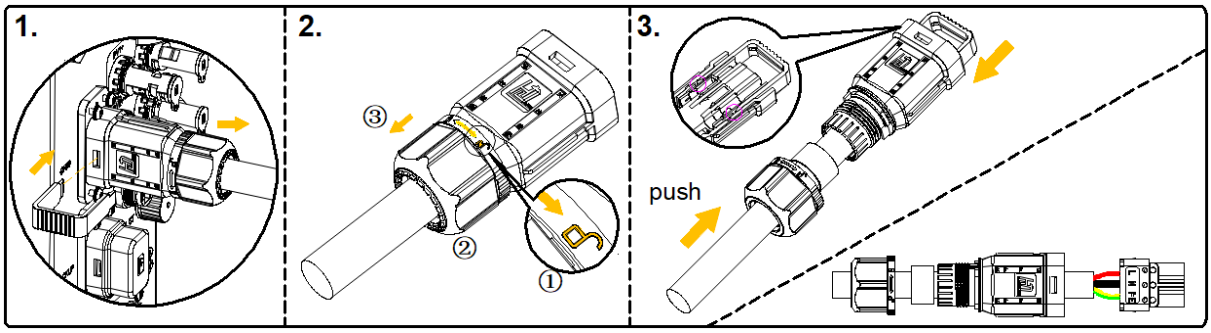

Figure 6-5 Disassembly of network connectors

6.3.5. CT Connection & Meter Connection & P1 Meter Reader Connection

Item	Scenarios
CT	CT (cable length 4 m)
DTSU666-3*230V 5(80)A	Three phase meter (without CT)
DTSU666-3*230V 100A/40mA	Three phase meter (with CT)
DTSU666-3*230V 250A/50mA	Three phase meter (with CT)

6.3.5.1 CT Connection

Grid CT, PV CT and their relative cables are provided as an accessory for the SMILE-M10/M9/M8/M5/M3.6-S&M5-B single phase inverter.

Please take out CT(s) from the package before installing. The CTs must be connected to the relative cables provided. The CT and the relative cables connect together via the connectors on each cable.

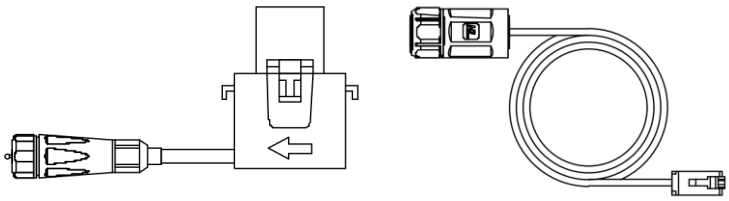

Figure 6-6 CT & relative cable

Step 1:

- Close the magnetic clamp of the Grid CT on the grid-supply cable. The ideal place for the Grid CT is between the Retail Meter and the Main Switch. If placed on either side of a Service Fuse, be very careful not to accidentally capture any Controlled Loads.
- The arrow on the casing of the Grid CT should point to the grid port of the energy storage inverter.
- In general, Controlled Loads should NOT be captured in the CT clamp.

Step 2:

- For hybrid or AC-coupled storage system application, close and latch the magnetic clamp of the PV CT on the AC output cable(s) of the installed PV inverter(s). The arrow on the magnetic buckle of the PV CT should point away from the PV inverter, again “toward the mains grid”.
- If multiple PV inverters are installed, ensure the PV CT captures the combined output either by combining the PV inverter outputs into a single wire to clamp or by clamping multiple wires. If clamping multiple wires, ensure that the multiple wires are aligned such that the arrow on the CT does not point to any of the PV inverters. Failure to follow this instruction would result in one PV output being subtracted from the other in the CT clamp measurement calculations.

Step 3:

- Take the network cable and pass it through the lock nut, sealing plug, and body in turn. The sealing plug is inserted through the opening on the side.
- The network cable plug is inserted into the RJ45 connector
- Use an open wrench to lock the main body to the RJ45 end on the connector; The torque is 2.0 ± 0.5 N·m.

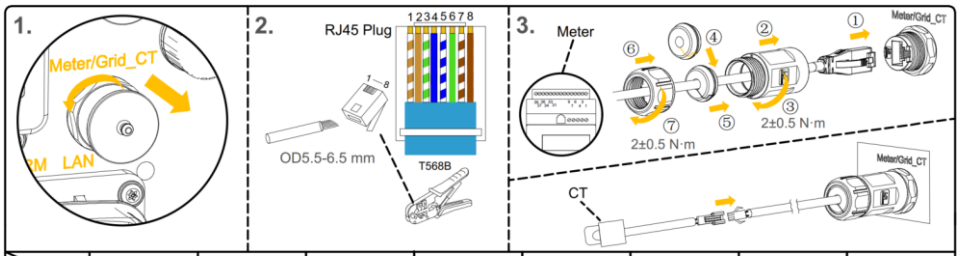

No. / Item	1	2	3	4	5	6	7	8
Grid_CT/Meter	Grid_CT-	Grid_CT+	RS485_A7	12 V	GND	RS485_B7	NC	NC
PV_CT	PV_CT-	PV_CT+	RS485_A7	NC	NC	RS485_B7	NC	NC

Figure 6-7 Grid CT installation

CAUTION

The CT cable marked Grid CT should be connected to the Grid CT, and the CT cable marked PV CT should be connected to the PV CT.

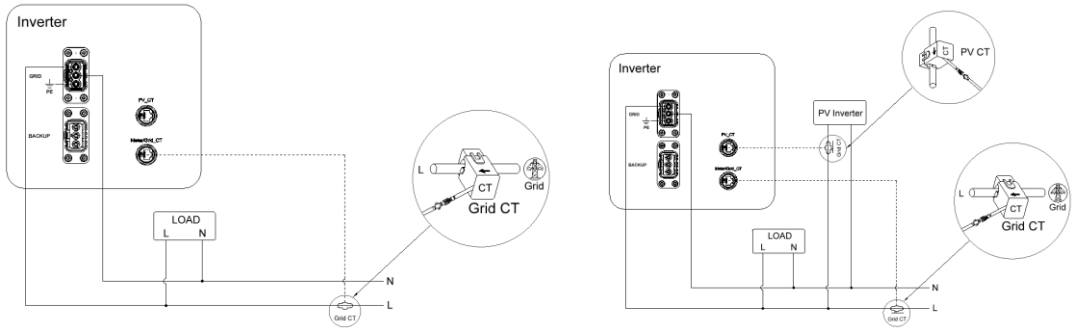

DC-Coupled Storage System AC-coupled or Hybrid-coupled Storage System

Figure 6-8 Installation positions of CT in AC, DC and Hybrid systems

6.3.5.2 Meter Wiring

Pass the meter communication cable through the cable gland of the COM connection cover but don't tighten the strain relief nut of the cable gland.

Insert the RJ45 plug of the meter communication cable into the METER communication port labelled "METER" of the inverter.

The other steps for meter connection as follow:

1. DSTU666-3*230V 5(80)A: three-phase meter (without CT) connection.

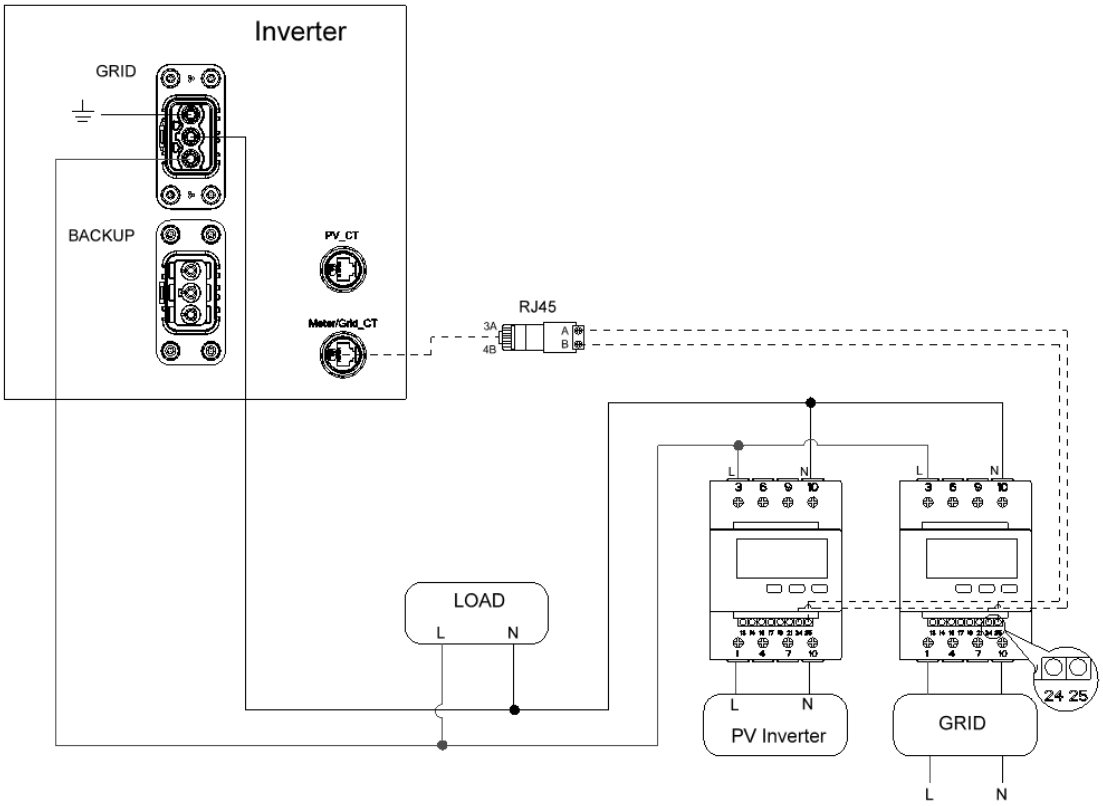

Figure 6-9 Single-phase household wiring diagram

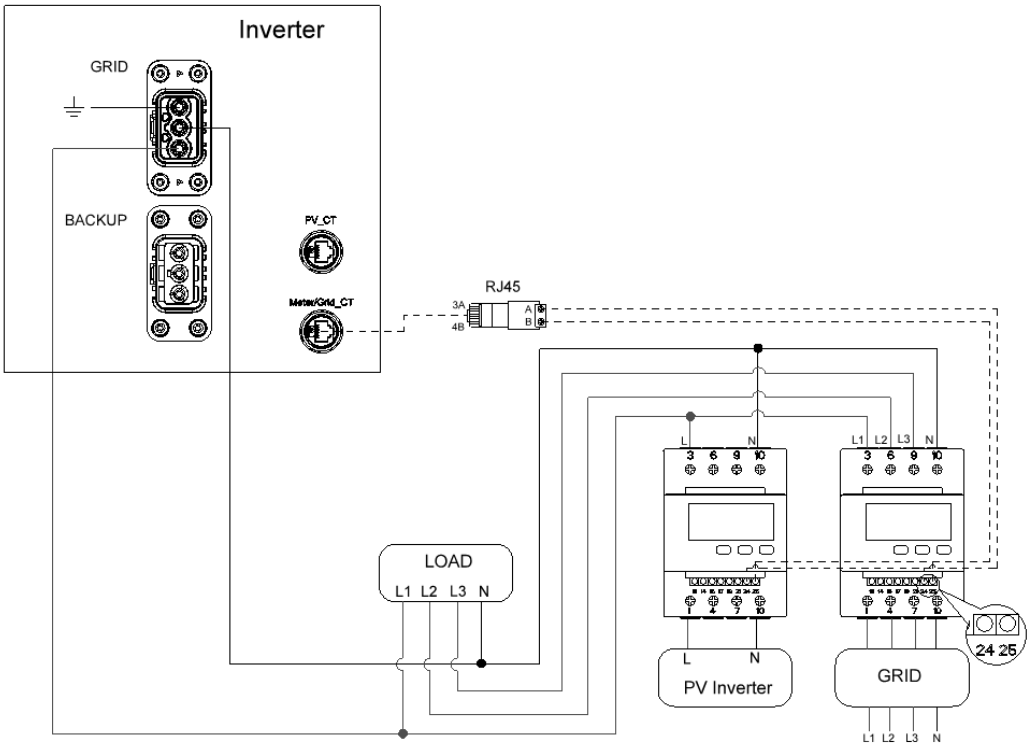

Figure 6-10 Three-phase household wiring diagram

Meter communication cable requirements: two-core outdoor shielded twisted pair copper cable (flexible), conductor cross-section 0.5~1.5 mm^2, wires terminal should be fitted with bootlace ferrules.

2. DSTU666-3*230V 100A/40mA: three-phase meter (with CT) connection.

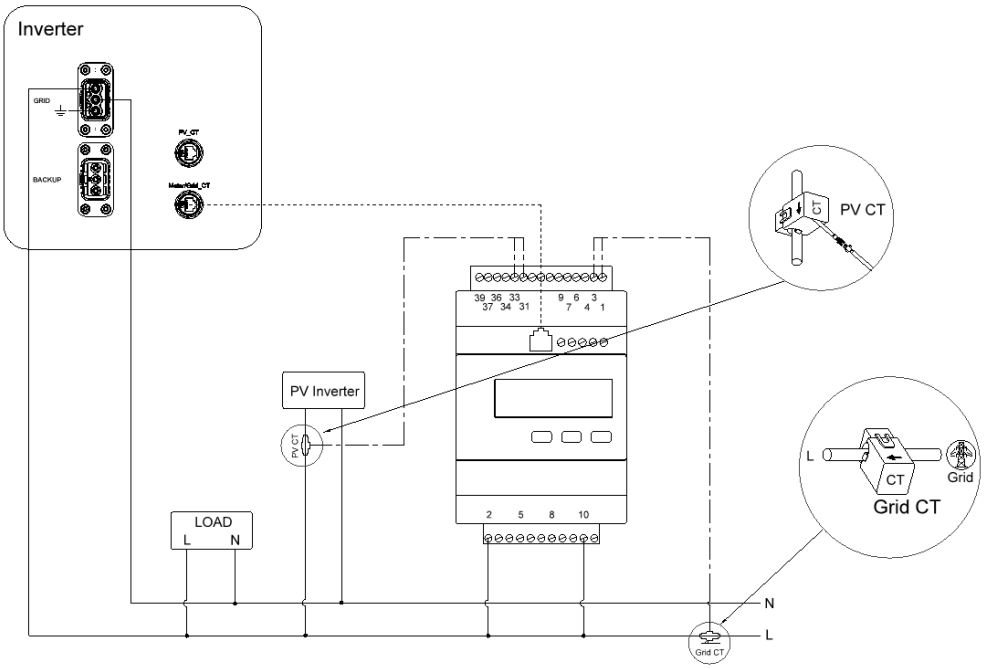

Figure 6-11 Single-phase household wiring diagram

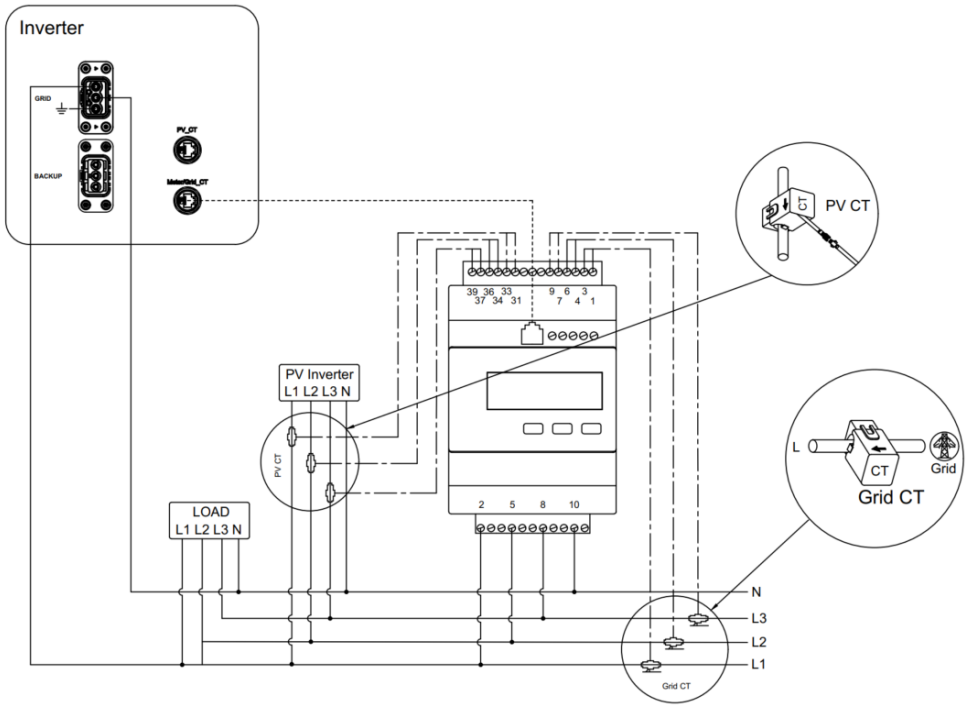

Figure 6-12 Three-phase household wiring diagram

Meter communication cable requirements: standard network cable (recommended type: Cat5e, SFTP, UV-resistant for outdoor use).

The connections are marked clearly on the meter.

Wiring location description of three-phase meter (with CT).

Grid CT	PV CT	GRID

1--------IA* (White)	31--------IA* (White)	2----------L1
3--------IA (Blue)	33--------I*A (Blue)	5----------L2
4--------IB* (White)	34--------IB* (White)	8----------L3
6--------IB (Blue)	36--------IB (Blue)	10-------- N
7--------IC* (White)	37--------IC* (White)	
9--------IC (Blue)	39--------IC (Blue)	

CT Group	Grid-> Load								PV->Load					
CT Phase	IA*	IA	IB*	IB	IC*	IC			IA*	IA	IB*	IB	IC*	IC
Terminal	1	3	4	6	7	9	X	X	31	33	34	36	37	39
Colour	White	Blue	White	Blue	White	Blue			White	Blue	White	Blue	White	Blue

NOTICE

Be VERY careful when wiring or checking these connections because the connections appear reversed when the meter is secured in place on the Din Rail. Always physically check the label on the meter when wiring any CTs or grid reference wires.

6.3.5.3 Meter Configuration

If connecting DTSU666 meter without CTs, two meters are required if there is any AC-coupled PV. One for the Grid Import/Export and one for the AC-coupled PV measurements.

Model	Grid Meter Address	PV Meter Address
DTSU666-3*230V 5(80)A (without CT)	1	2
DTSU666-3*230V 100A / 40 mA (with CT)	1	N/A
DTSU666-3*230V 250 A / 50 mA (with CT)	1	N/A

1. Meter setting for type DTSU666-3*230V 5(80)A, which is three-phase meter (without CT). When the meter is used as grid meter, the default address is 1. The installer doesn't need to make any other settings.

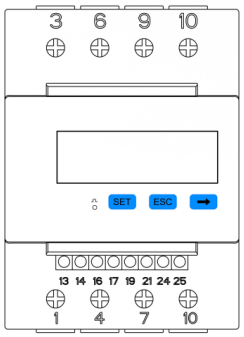

Figure 6-13 DTSU666-3*230V 5 (80) A type three-phase electricity meter (without CT) setting

If installer wants to have a check, please follow the steps bellow:

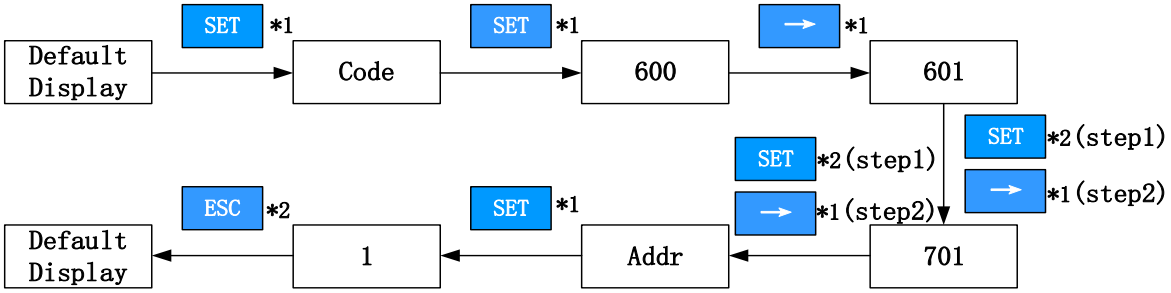

Figure 6-14 Installation program check

When the meter is used as PV meter, please follow the steps below to complete the address setting:

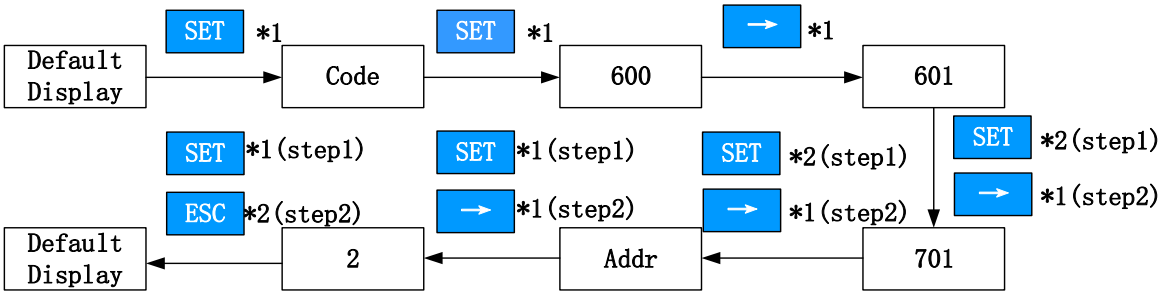

Figure 6-15 Address setting for photovoltaic electricity meters

2. Meter setting for type DTSU666-3*230V 100A/40mA, three-phase meter (with CT).

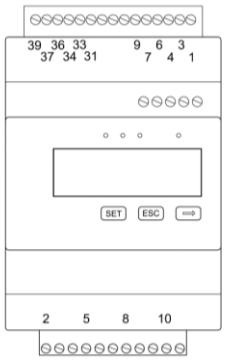

Figure 6-16 Range setting of DTSU666-3*230V 100A/40mA three-phase electricity meter (with CT)

The default address is 1. The installer doesn't need to make any other settings.

If installer wants to have a check, please follow the steps below:

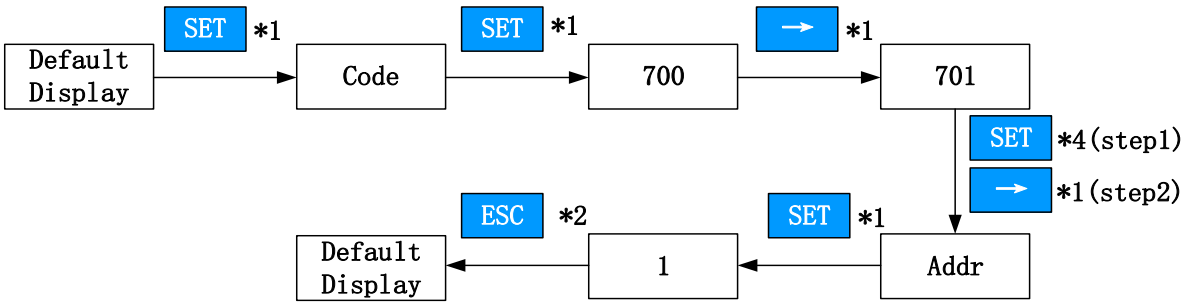

Figure 6-17 Installation program check

The display order of parameters:

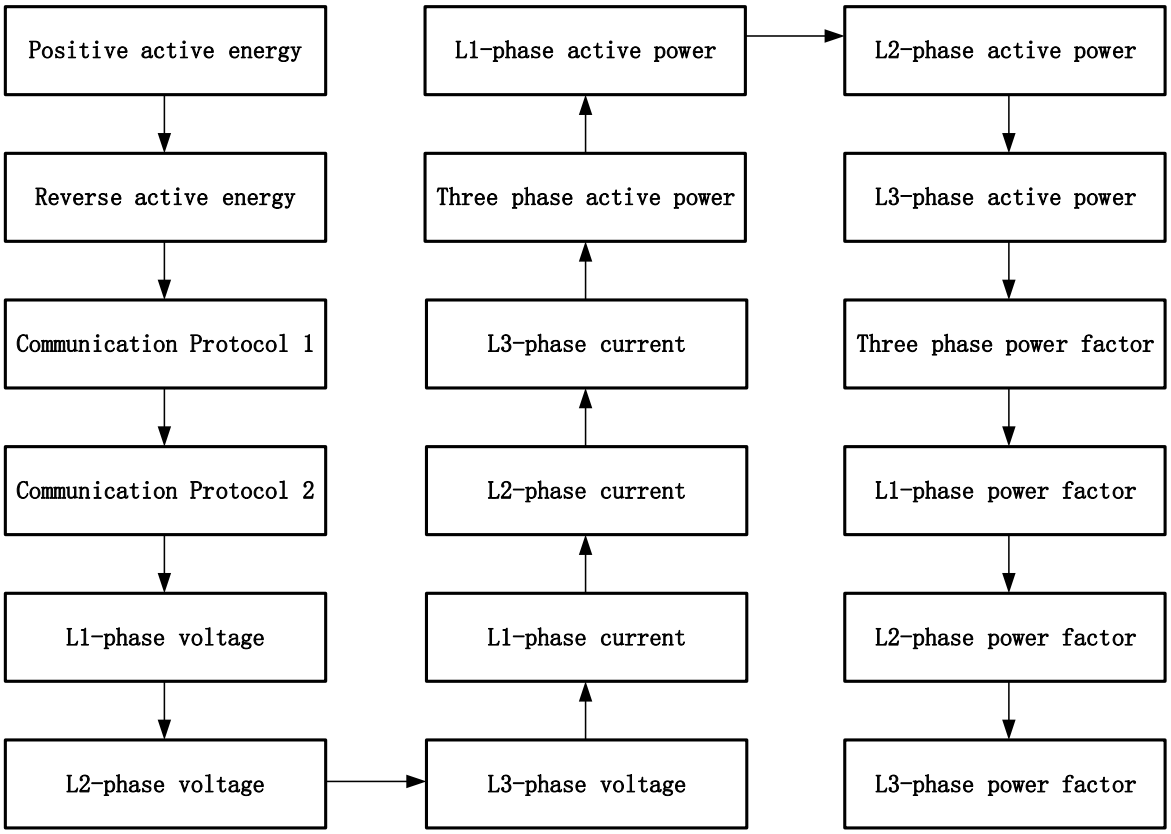

Figure 6-18 Parameter display sequence

6.4. PV Connection (Not for SMILE-M5-B-INV)

6.4.1. Connecting the PV Array

DANGER

Danger to life due to electric shock if live components or DC cables are touched

The DC cables connected to a PV module may be live. Touching live DC cables can result in serious injury or even death due to electric shock. To avoid this danger:

- Disconnect the inverter and battery from voltage sources and make sure it cannot be reconnected before working on the device.
- Do not touch non-insulated parts or cables.
- Do not disconnect the DC connectors under load.
- Wear suitable personal protective equipment for all work on the product.
- Observe all safety information in this document.

NOTICE

Risk of the inverter due to overvoltage

If the open-circuit voltage of the PV modules exceeds the maximum input voltage of the inverter, the inverter can be destroyed due to overvoltage.

- If the open-circuit voltage of the PV modules exceeds the maximum input voltage of the inverter, do not connect any strings to the inverter and check the design of the PV system.

NOTICE

Risk of product damage due to ground fault on DC side during operation

Due to the transformerless topology of the inverter, the occurrence of ground faults on DC side during operation can lead to irreparable damage. Damages to the inverter due to a faulty or damaged DC installation are not covered by warranty. The inverter is equipped with a protective device that checks whether a ground fault is present during the starting sequence. The inverter is not protected during operation.

- Ensure that the DC installation is carried out correctly and no ground fault occurs during operation.

NOTICE

Risk of the inverter damage due to sand, dust and moisture ingress if the PV inputs are not closed

The inverter is only properly sealed when all unused PV inputs are closed with sealing plugs. Sand, dust and moisture penetration can damage the inverter and impair its functionality.

- Seal all unused PV inputs using sealing plugs.

Please ensure the following before connecting PV strings to the inverter:

1. Make sure the open voltage of the PV strings will not exceed the max. DC input voltage (600 Vdc). Violating this condition will void the warranty.
2. Make sure the polarity of the PV connectors is correct.
3. Make sure the PV-switch, breakers of battery, AC-BACKUP and AC-Grid are all isolated/in their “off” states.
4. Make sure the PV resistor to ground is higher than 200K Ohms.

The inverter uses the Vaconn D4 PV connectors. Please follow the picture below to assemble the PV connectors.

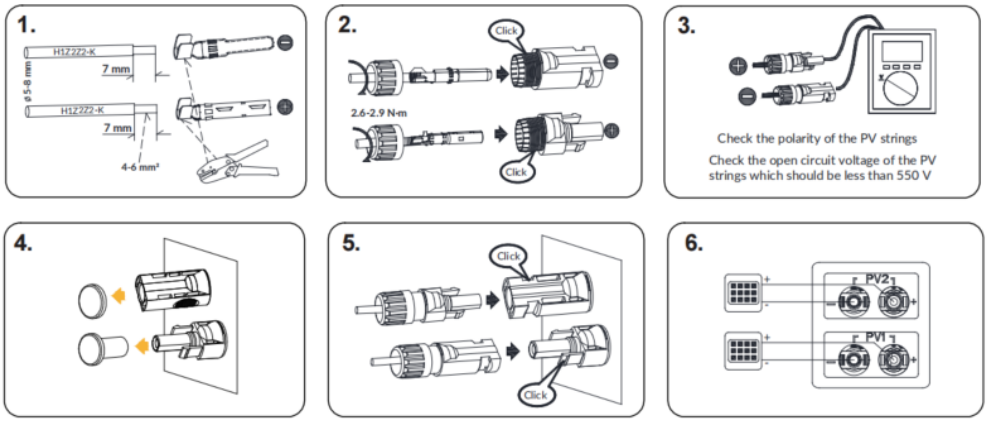

Figure 6-19 Assembly of photovoltaic connectors

6.4.2. Disassembling the PV Connector

DANGER

Danger to life due to electric shock if live components or DC cables are touched

The DC cables connected to a PV module may be live. Touching live DC cables can result in serious injury or even death due to electric shock. To avoid this danger:

- Disconnect the inverter and battery from voltage sources and make sure it cannot be reconnected before working on the device.
- Do not touch non-insulated parts or cables.
- Do not disconnect the DC connectors under load.
- Wear suitable personal protective equipment for all work on the product.
- Observe all safety information in this document.

Ensure that the PV connector can only be removed via using the Connector removal wrench.

Removing the PV connector without the PV Connector Disassembling Tool is not allowed and dangerous.

1. Release and remove the PV connectors. To do so, insert the removal wrench into the bayonet, press the wrench with an appropriate strength to release the locking mechanism, then pull the PV connectors out. Please do not pull on the cable.

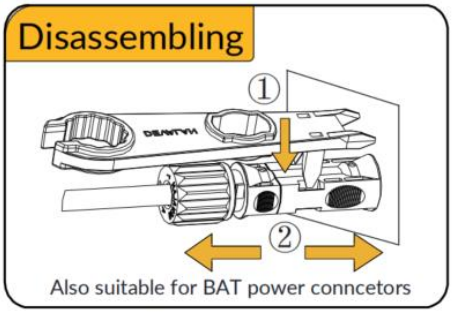

Figure 6-20 Disassembly of PV connectors

2. If there are PV connectors unused, please use the PV covers to seal the PV connectors.

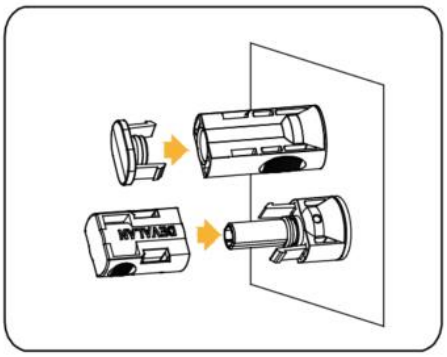

Figure 6-21 Seal the PV connectors

6.5. Communication Connection with Inverter

For other communication (AUX, LAN, RRCR, DRM, RS485) connection, please follow the steps below.

1. Remove the COM connection cover of the inverter.

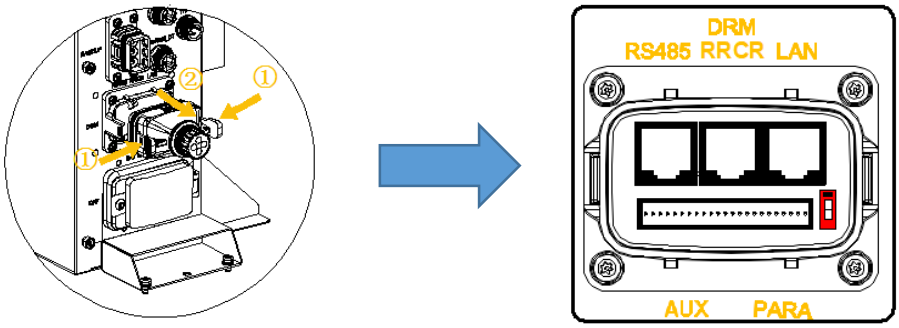

Figure 6-22 COM connection cover

2. Pass the communication cables through the cable glands of the COM connection cover.

(1) Insert the RJ45 plugs to the relative RJ45 sockets

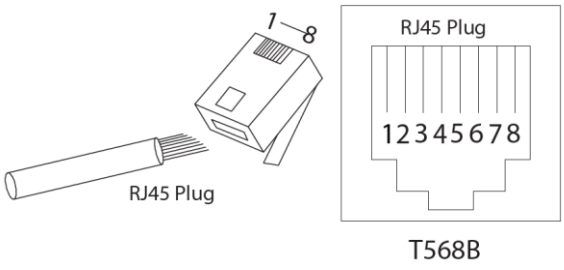

Figure 6-23 RJ45 plug connection

(2) If DRM support is specified, the system may only be used in conjunction with a Demand Response Enabling Device (DRED). This ensures that the system implements the commands from the grid operator for active power limitation at all times. The system and the Demand Response Enabling Device (DRED) must be connected in the same network.

Only DRM0 is available for SMILE-M inverter.

(3) Take out 1 piece of 18 pin terminal block for AUX and PARA connection.

For AUX position definition, please refer to the AUX wiring documentation.

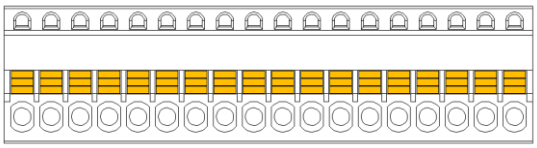

Figure 6-24 A 6-pin terminal block with AUX connection

In emergency situations, such as fire, the end user can manually press the EPO (Emergency Power Off) button to shut down the inverter and switch off the battery (except for the PV array). End users or installer should prepare the external EPO.

AUX cable requirements: outdoor shielded copper cable (flexible), recommended conductor cross-section 0.5 mm^2. Conductor ends should be fitted with bootlace ferrules.

To disconnect the AUX connection, rotate the handles on both sides clockwise, unplug the AUX connector, insert a screwdriver (blade width: 1.2 mm) into the relative connection position side and unplug the conductor.

3. Place the COM connection cover against the inverter enclosure.

The pin definition of the communication ports:

No. / Item	1	2	3	4	5	6	7	8
RS485	12V	NC	GND	RS485_B5	RS485_A5	NC	NC	NC
DRM	DRED1/5	DRED2/6	DRED3/7	DRED4/8	REFGEN/0	COMLOAD/0	NC	NC
RRCR	K1	K2	K3	K4	3.3V	NC	NC	NC
LAN	TX+	TX-	RX+	Pullup	TR	RX-	NC	GND_LAN

The electrical parameters of the AUX port:

AUX&PARA	1	2	3	4	5	6	7	8	9
	DO1_NO	DO1_COM	DO1_NC	12V	DEVICE_A	GND	DO2_NO	DO2_COM	DO2_NC
	10	11	12	13	14	15	16	17	18
	12V	DEVICE_B	GND	CAN1_H	CAN1_L	SYN	GND	CAN2_H	CAN2_L

6.6. Mount Cover of the Inverter

After finishing electrical connection of energy storage system, please follow the steps below to mount the covers.

1. Mount the cable cover of the inverter, Refer to 1-2 in Figure 6-25.

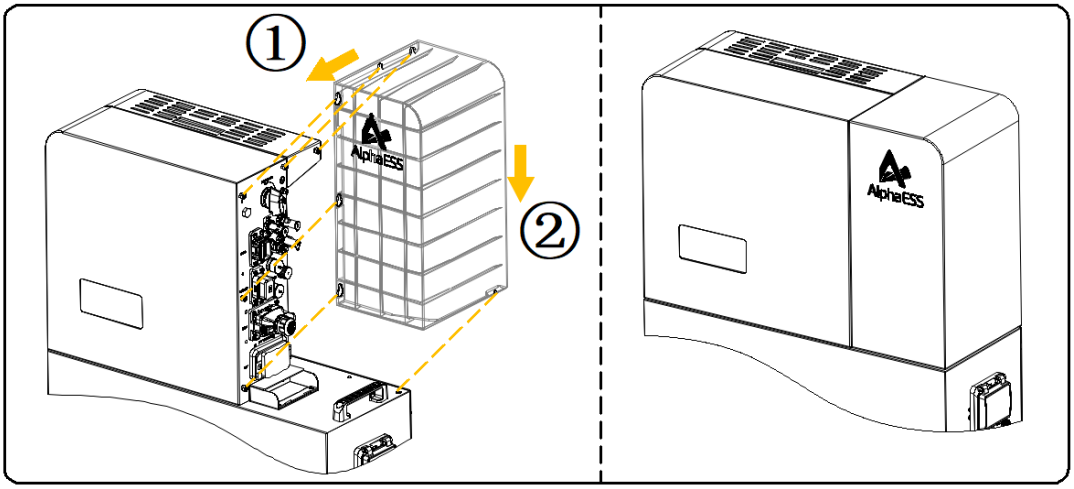

Figure 6-25 Install the cable cover for the battery

7. Power on and off the System

7.1. Power on the System

WARNING

- Before power on the ESS, please ensure the PV switch & all AC and BAT circuit breakers in the system are switched OFF and cannot be reactivated.
- Never power on the ESS without the correct and reliable installation and electrical connection.

1. Switch on the battery circuit breaker which is at the lower right of the inverter.
2. Switch on the battery circuit breakers of all batteries.
3. Shortly press the power buttons of all parallel batteries. For more than one parallel battery installed, please press all power buttons within 30 seconds. This power button is located just beside the battery circuit breaker on each parallel battery
4. Switch on the AC circuit breaker between the grid port of the ESS inverter and the mains grid (this AC circuit breaker should be labelled Main Switch Battery ESS Supply or similar).
5. Switch on the AC circuit breaker between the backup port of the ESS inverter and the loads (this AC circuit breaker should be labelled Main Switch Battery ESS Backup or similar).
6. Switch on the PV switch at the upper right of the inverter (if there are PV strings directly connected to the ESS inverter).
7. Switch on the AC circuit breaker (if there is any) between any separate PV inverter and the mains grid. These separate PV inverters are also referred to as "AC-coupled PV inverters".

7.2. Power off the System

WARNING

After the energy storage system is powered off, the remaining electricity and heat may still cause electric shocks and body burns. Please put on protective gloves and operate the product 5 minutes after the system is powered off.

1. Switch off the AC circuit breaker between the ESS inverter and the backed-up loads.
2. Switch off the AC circuit breaker between the ESS inverter and the mains grid.
3. Switch off the PV DC Isolator(s) between the PV strings and the ESS inverter if there are any.
4. Switch off the PV switch on the lower left of the ESS inverter (if there are PV strings directly connected the ESS inverter).

5. Hold the battery power button located beside the battery circuit breaker for 6 s to turn off each parallel battery.
6. Switch off the battery circuit breakers of all batteries.
7. Switch off the battery circuit breaker which is at the lower right of the inverter.

8. Commissioning

8.1. Checks Before Power-On

No.	Check Item	Acceptance Criteria
1	Installation/Mounting environment	The installation environment is safe and the unit has adequate clearance as per the instruction in this manual as well as in compliance with local standards. The area around the installation should be free from clutter and should not be flood-prone.
2	Battery and inverter mounting	The battery and inverter should be mounted correctly, securely, and reliably.
3	Wi-Fi mounting	The Wi-Fi Dongle should be mounted correctly, securely, and reliably.
4	Cable layout	Cables should be routed neatly and protected adequately where exposed, in accordance with standards.
5	Cable tie	Cable ties should be secured and trimmed evenly and no burr exists.
6	Grounding	The grounding cables should be connected correctly, securely, and reliably. Impedance/resistance checks should be conducted to confirm reliable Earth connections.
7	Switches and circuit breakers status	The PV switch (if there is any) and battery circuit breakers and any AC circuit breakers connecting to the energy storage system should be OFF.
8	Cable connections	The AC cables, PV cables (if there are any), battery power cables, and communication cables should be connected correctly, securely, and reliably.
9	Unused ports	Unused power ports and communication ports should be sealed from water or dust ingress by watertight caps.

8.2. Power on the Product before Commissioning

WARNING

- Before commissioning, please ensure the PV switch & all AC and BAT circuit breakers in the system are switched OFF and cannot be reactivated.
- Never power on the energy storage system without the correct and reliable installation and electrical connection.
- Don't switch on the PV switch on the energy storage inverter.
- Don't switch on the AC circuit breaker on the PV inverter (if there is any).

Please strictly follow the steps described in section 7.1 to power on the system.

8.3. Installing New System and Setting up the App

8.3.1. Download and Install the App

1. Android device users can download the App through major Android App stores such as Google Play. You can also scan the following two-dimensional code to install.
2. IOS device users can search for “Partner APP” in the App Store and download the App. You can also scan the following QR code to install.

Partner App For Android Partner App For IOS

Figure 8-1 AlphaESS App

8.3.2. Register as an Installer

If you don’t have an installer account, please register first.

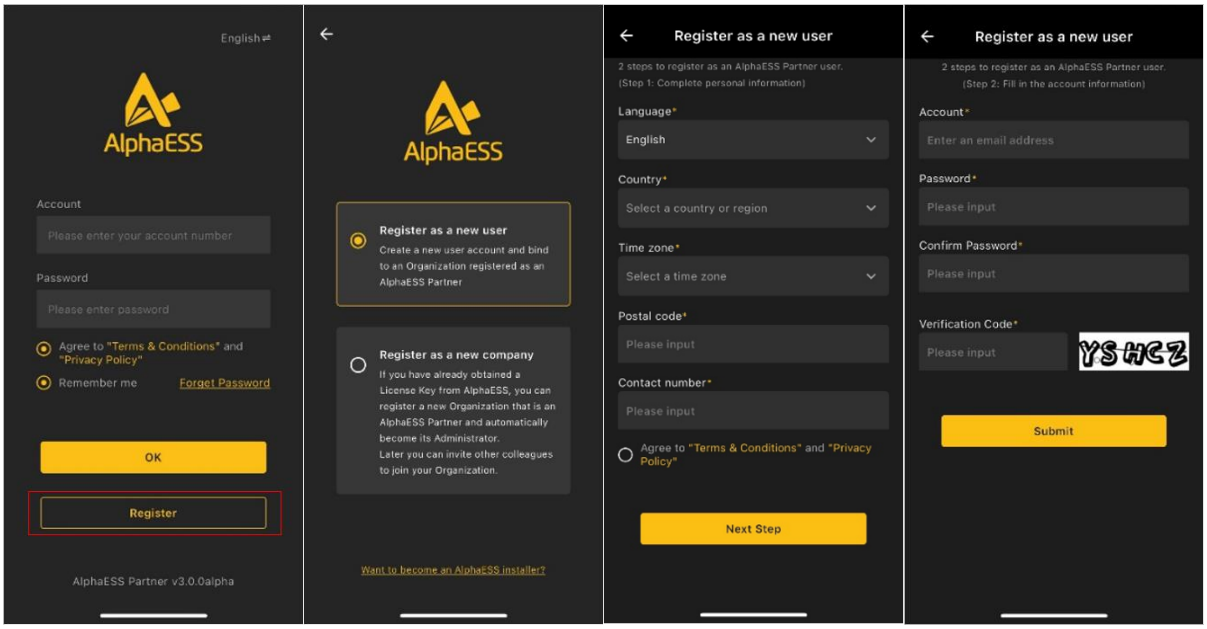

Figure 8-2 APP register and login

If you already have an installer account, please log in directly.

8.3.3. Install New System on the App

For regular installers, please click “New Installation”, scan the QR code on the label on the left side of the inverter to do the Wi-Fi configuration. And then, please fill out the basic information and parameter settings. After that, please run the self-test program to make sure the inverter is installed correctly.



Step1 New Installation

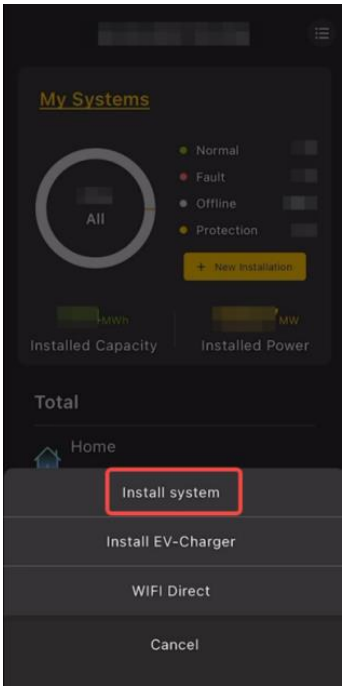

Step2 Install System

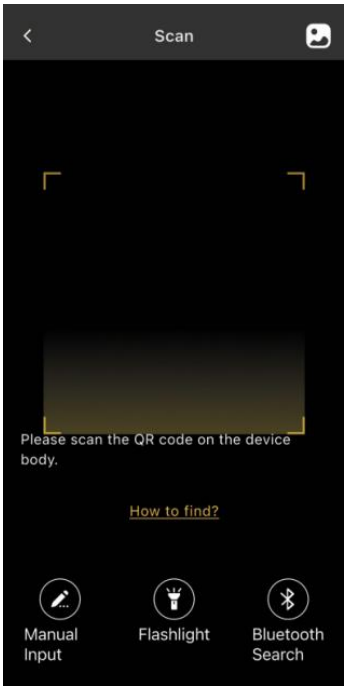

Step3 Scan the QR code

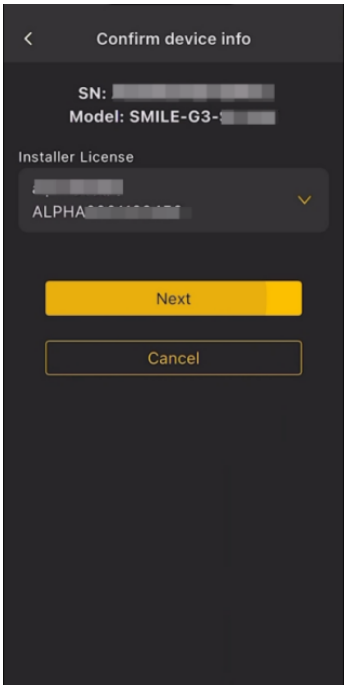

Step4 Confirm Device Info

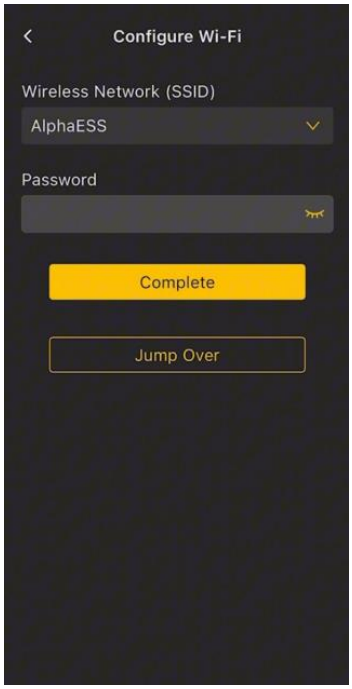

Step5 Configure Wi-Fi

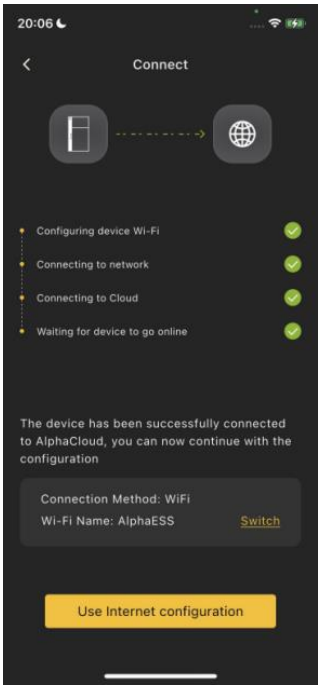

Step6 Connect Details

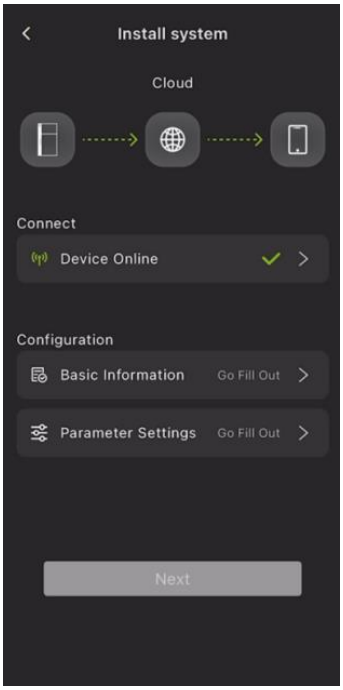

Step7 Parameter configuration interface

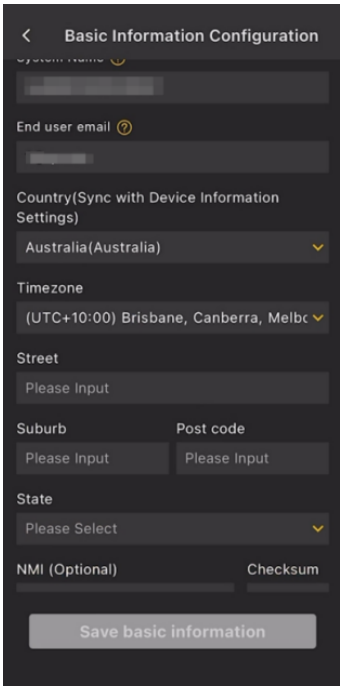

Step8 Fill Out Basic Information

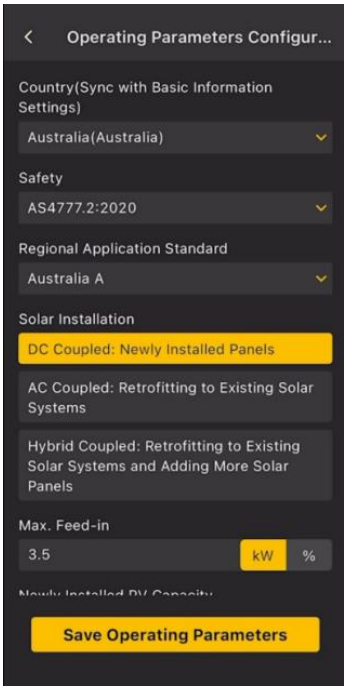

Step9 Fill Out Parameter Settings

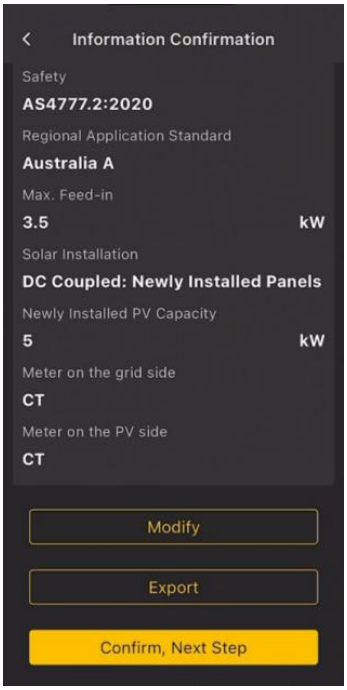

Step10 Information Confirmation

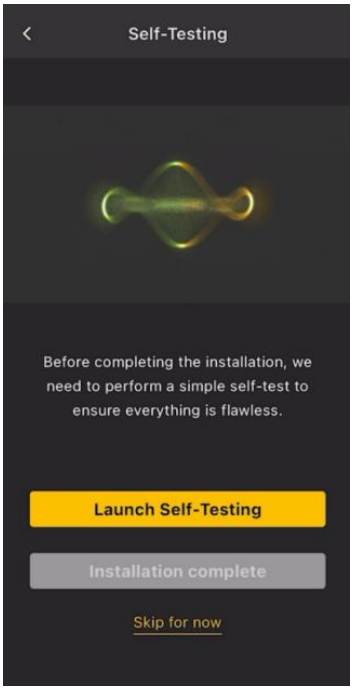

Step11 Launch Self-Test

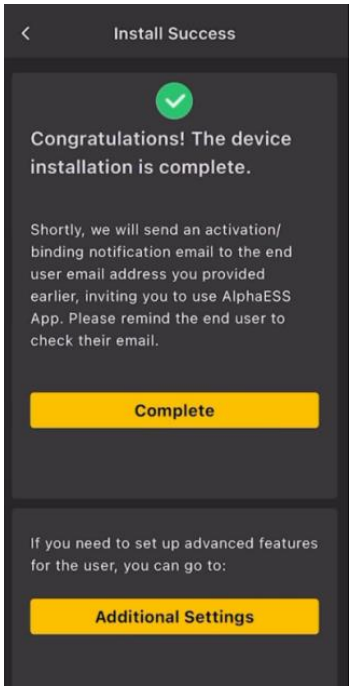

Step12 Complete Installation

Figure 8-3 Install the new system in APP

8.3.4. Instruct the End User to Install the App

Please make sure that end user has downloaded the App, registered the account correctly, and bound the system SN.

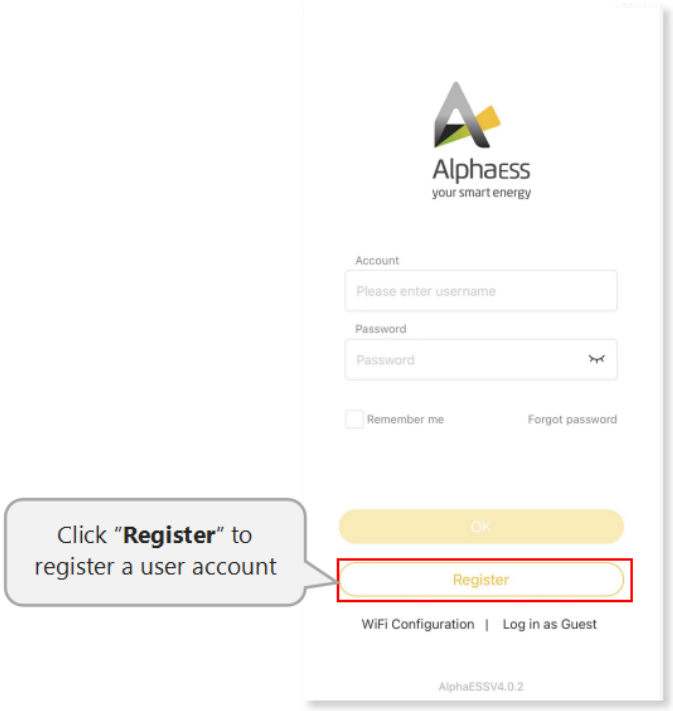

Figure 8-4 User account registration

8.4. Wi-Fi Configuration and Basic Parameters

This section is for user who has an energy storage system with a Wi-Fi dongle.
The Partner App is used to configure the network, set system basic parameters, monitor system operating status and check configurations.

8.4.1. Wi-Fi Dongle Configuration

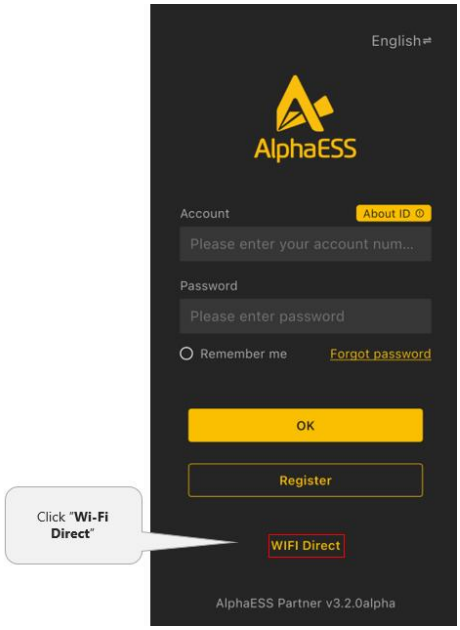
English
AlphaESS
Account
About ID
Please enter your account num...
Password
Please enter password
Remember me
Forgot password
OK
Register
WIFI Direct
AlphaESS Partner v3.2.0alpha
Click "Wi-Fi Direct"


Connect to the hotspot
1/4
After powering on, please make sure that the Power light of the Wi-Fi Dongle is always on.
I know, go to configure

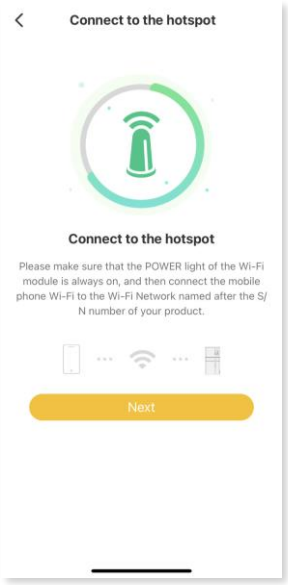
Connect to the hotspot
Connect to the hotspot
Please make sure that the POWER light of the Wi-Fi module is always on, and then connect the mobile phone Wi-Fi to the Wi-Fi Network named after the S/N number of your product.
Next

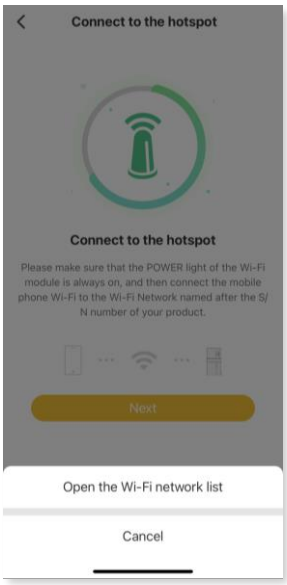
Connect to the hotspot
Connect to the hotspot
Please make sure that the POWER light of the Wi-Fi module is always on, and then connect the mobile phone Wi-Fi to the Wi-Fi Network named after the S/N number of your product.
Next
Open the Wi-Fi network list
Cancel

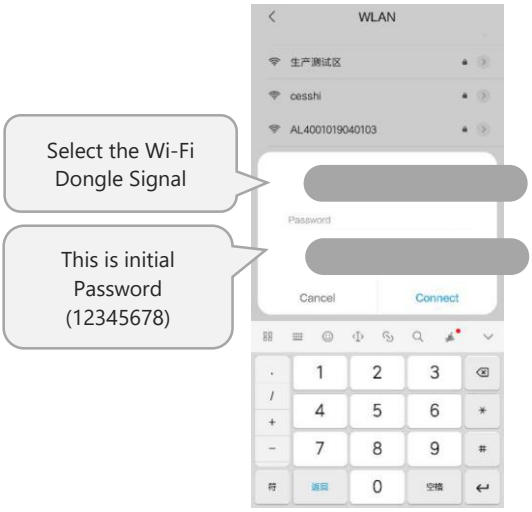
WLAN
生产测试区
cesshi
AL4001019040103
Password
Cancel
Connect
Select the Wi-Fi Dongle Signal
This is initial Password (12345678)

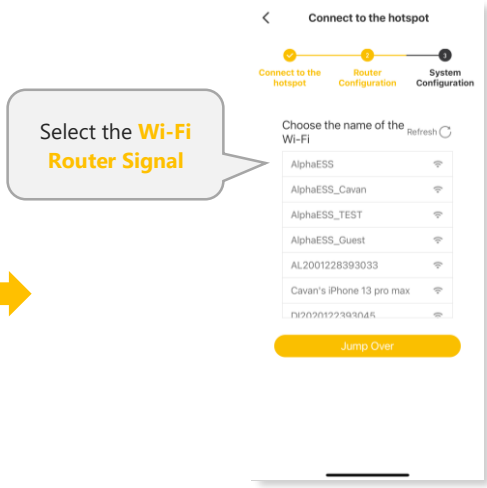
Connect to the hotspot
Connect to the hotspot
Router Configuration
System Configuration
Choose the name of the Wi-Fi
Refresh
AlphaESS
AlphaESS_Cavan
AlphaESS_TEST
AlphaESS_Guest
AL2001228393033
Cavan's iPhone 13 pro max
Jump Over
Select the Wi-Fi Router Signal

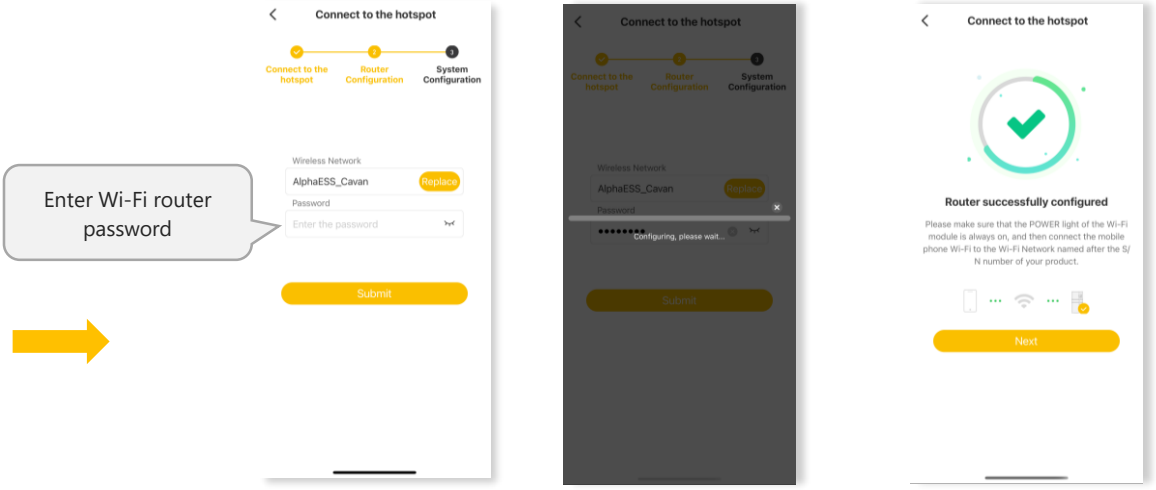

Figure 8-5 APP Wi-Fi connection and configuration

NOTICE

- The system will not be able to connect to the internet without either a physical LAN cable connection or configured Wi-Fi if the Wi-Fi module is used.
- To ensure account security, change the Wi-Fi password periodically and keep the new password in mind. Not changing the initial password may cause password disclosure. A password left unchanged for a long period of time may be stolen or cracked. If a password is lost, devices cannot be accessed.

8.4.2. Basic Parameters Settings

DC Mode

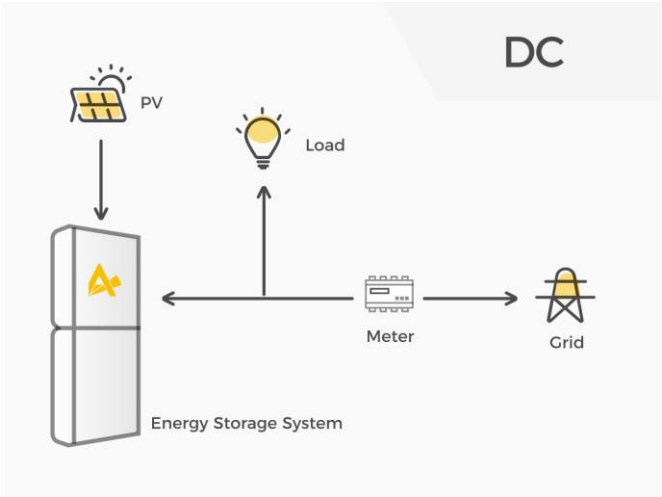

Figure 8-6 DC Mode

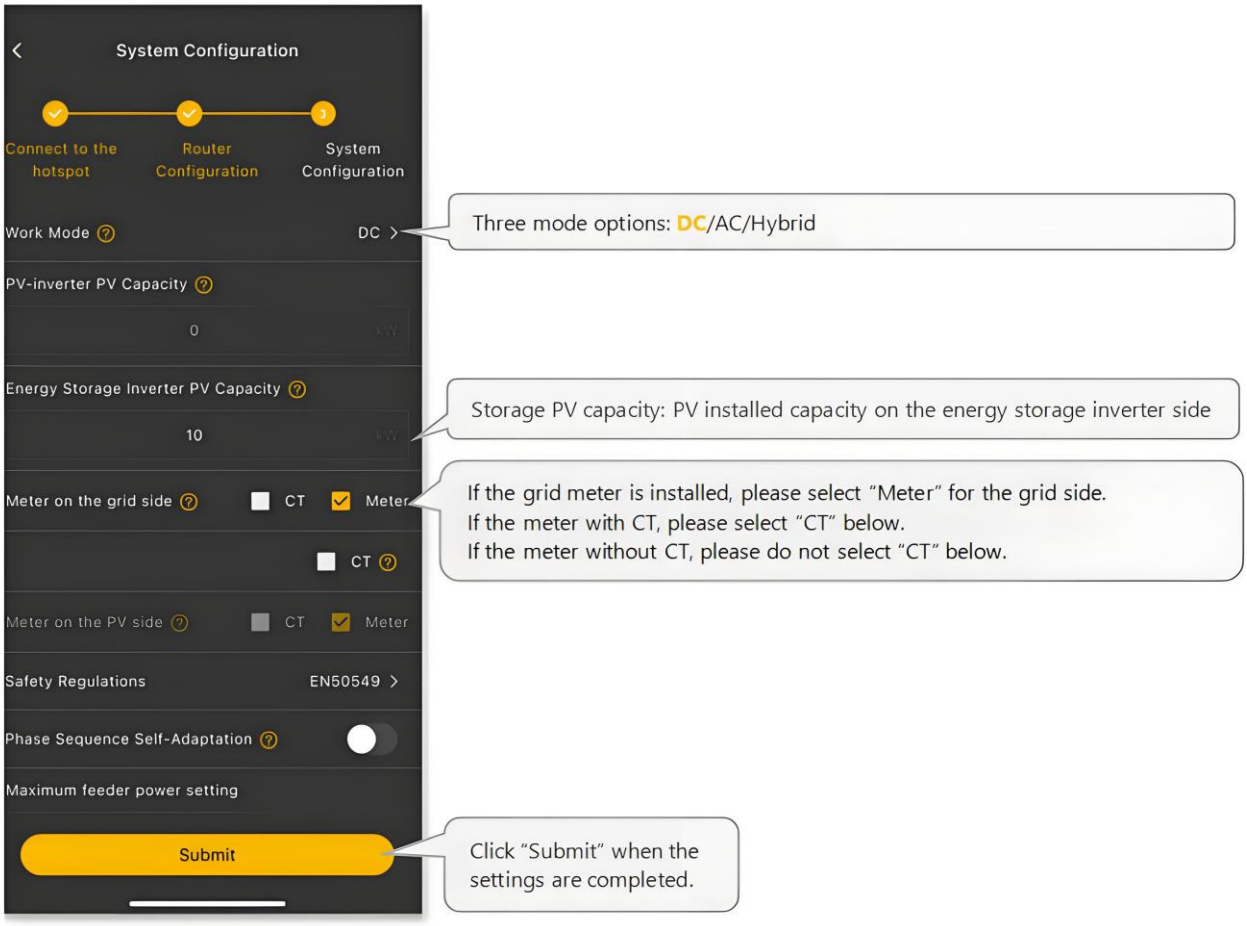

Figure 8-7 APP DC mode Settings

AC Mode

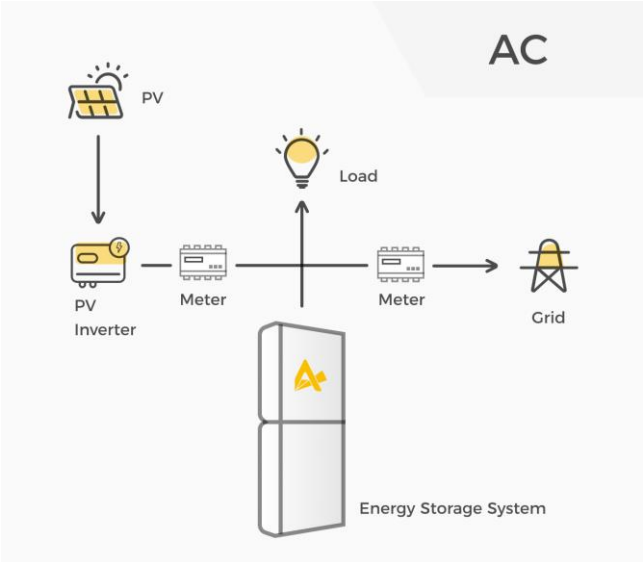

Figure 8-8 AC Mode

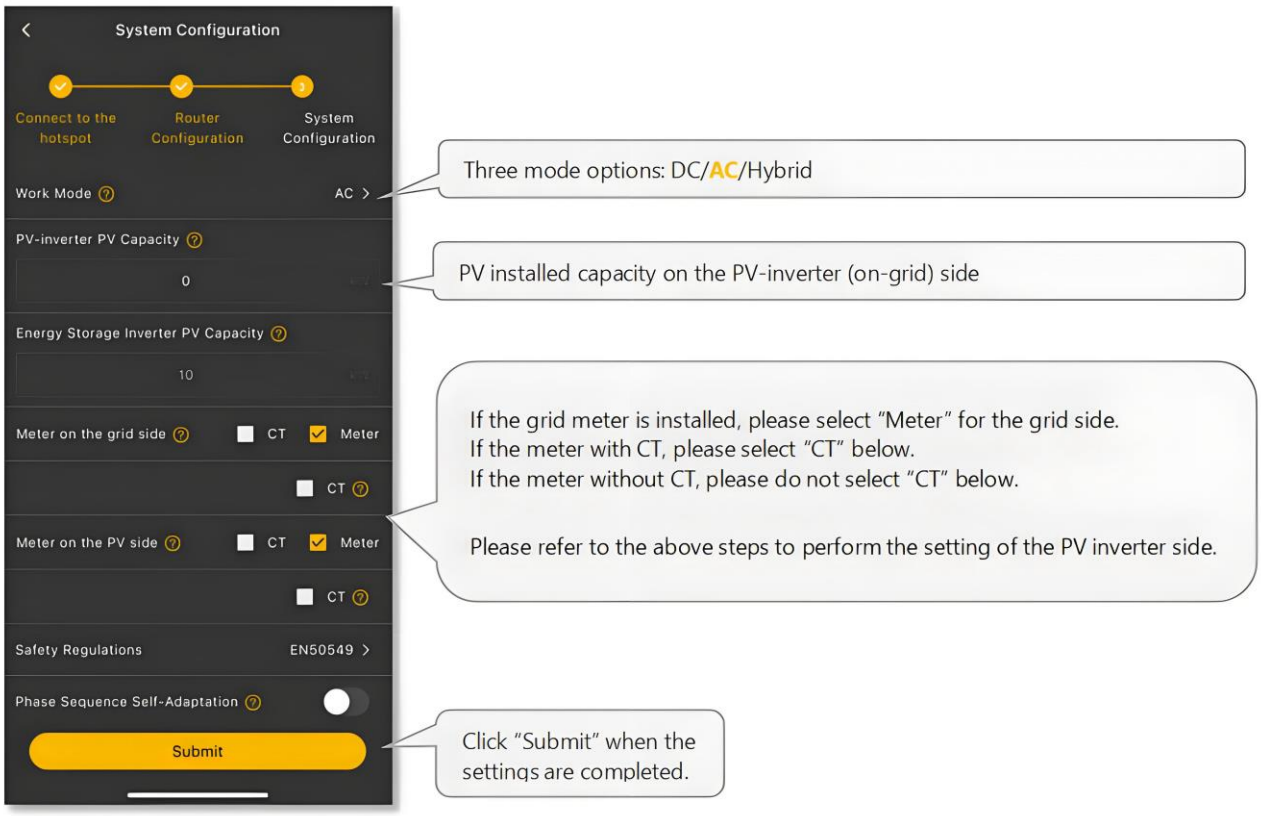

Figure 8-9 APP AC mode Settings

Hybrid Mode

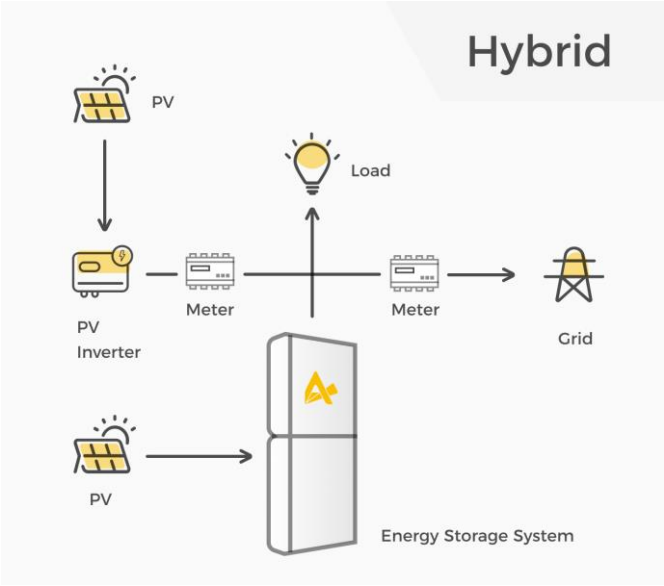

Figure 8-10 Hybrid Mode

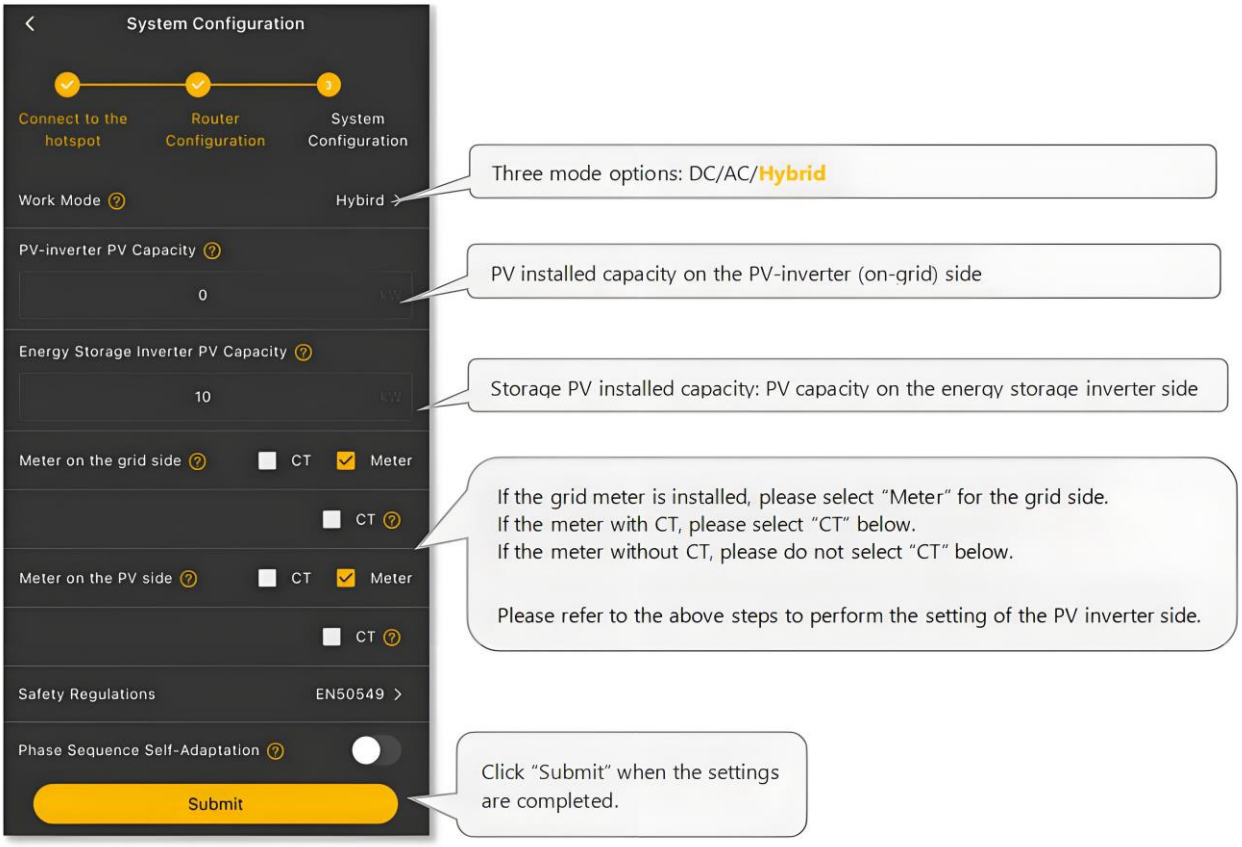

Figure 8-11 APP Hybrid mode Settings

8.4.3. Information on the main page

After finishing the basic parameters setting, all the stauts can be found via the main page. On the main page, tap "your device" to view the information for the system. The firmware version can be checked in the "Firmware information", and the safety regulations, the power quality modes and setpoints can be viewed through the "inverter information". Once the safety regulation is chosen during the basic parameters setting, only the Alpha service engineer can change the safety regulation and the setpoints for the power quality response modes. Please contact AlphaESS to change settings when necessary.

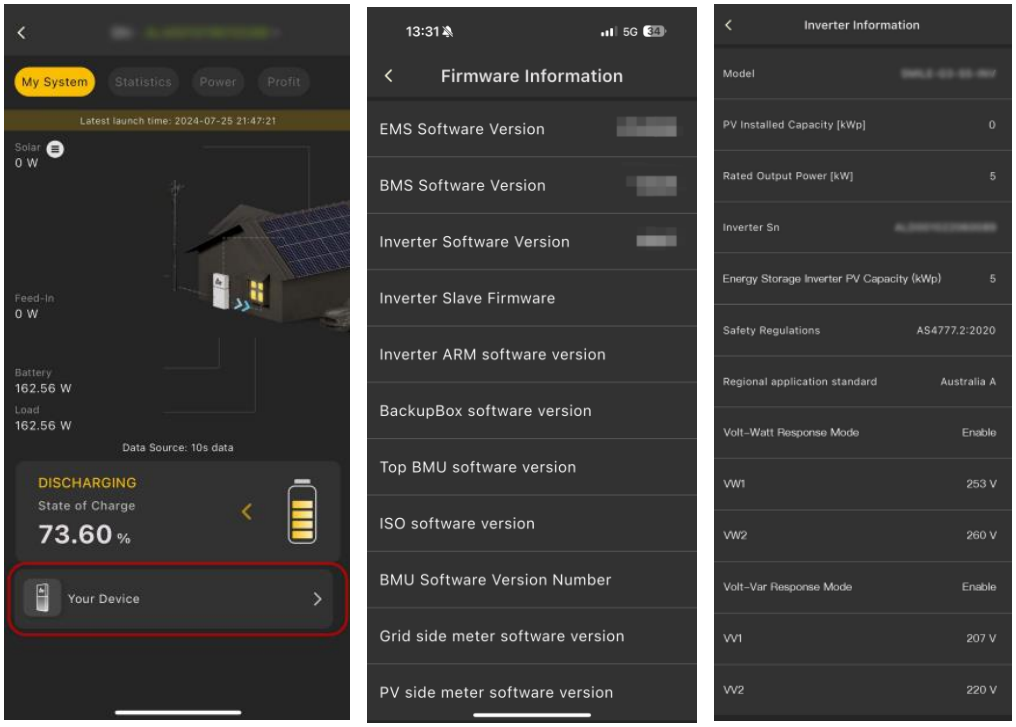

Figure 8-12 Check device information

8.4.4. Function settings

8.4.4.1 Generation and export limitation

Specifically, if you are an installer who wants to set the soft export limit, you can set the allowable max feed-in factoe from 0-100%, the output to the grid will be reduced based on the inverter maximum output power multiplied by the factor. Or you can set the allowable max feed-in power from 0 W to the rated power of inverter. To switch to the hard export limit and keep the same value, please contact Alpha ESS. To set up the generation limit (for both hard and soft limit), go to your device after the configuration and choose "Inverter Information", where you can set the number of the apparent power for generation limit.

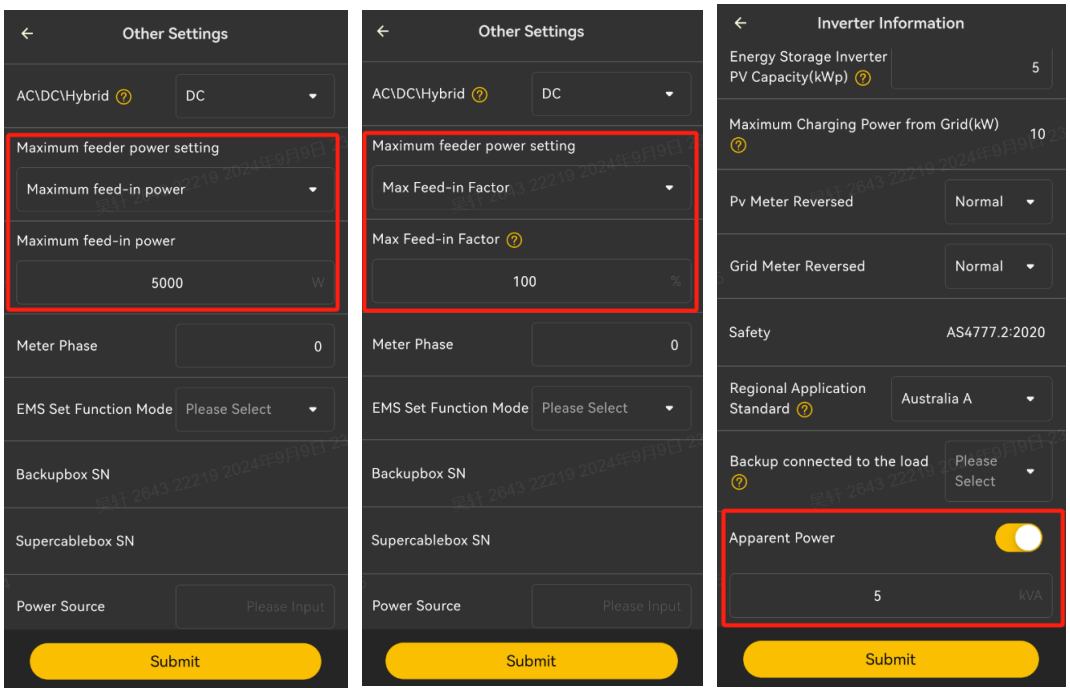

Figure 8-13 Other Settings

CAUTION

The safety standard field must be set correctly

If you select a safety standard that is not valid for your country, region and purpose, it can cause a disturbance in the energy storage system and lead to problems with the Network Operator. When selecting the safety standard, you must always observe the locally applicable standards and directives as well as the properties of the PV system (e.g. PV system size, grid-connection point).

- If you are not sure which safety standard is valid for your country, region or purpose, contact your Network Operator for information on which safety standard should be used.

NOTICE

A Note on setting Feed-In limits with multiple PV systems

If the product is installed with DC-connected Solar Panels as well as with an existing AC-coupled PV system, Installers may need to set a Feed-In limit to comply with Local Regulations.

The Feed-in limit should be set to the total Phase feed-in limit set by the Network Operator, regardless of the size of the existing AC-coupled PV system. Only set the feed-in limit to *zero* if the Network Operator has dictated *zero feed-in* from the house.

For more detail information about the Partner APP, please scan the QR code below.

8.5. Register on AlphaCloud

8.5.1. Register an Installer Account on AlphaCloud

If you do not already have an Installer account, you can create a new account on our web server for system monitoring purposes. In addition, Alpha Warranty is predicated on this connection to our web server.

The data produced prior to registration can be synchronized to the web server.

Step 1: Please open the portal: www.alphaess.com.

Step 2: Please fill in “Username”, “Password” and click “Login” if you have already registered.

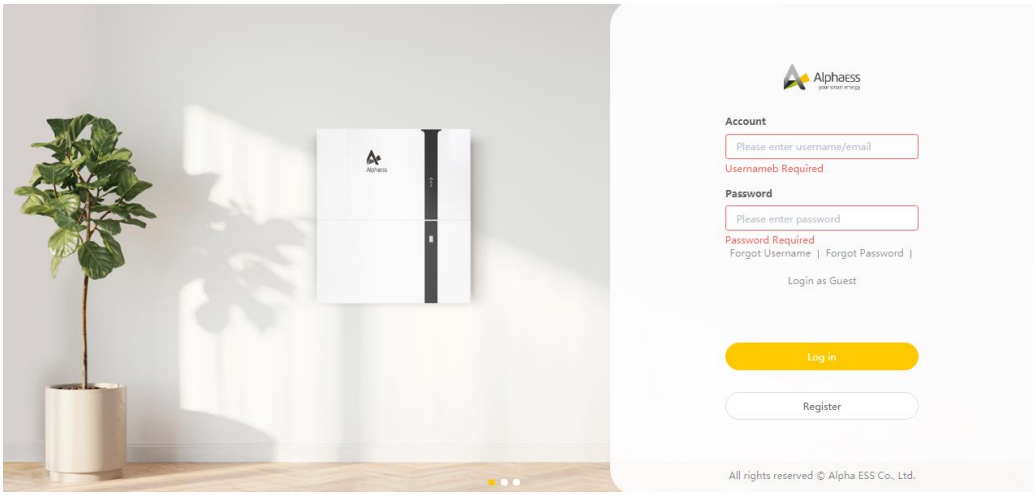

Figure 8-14 Alpha Cloud platform login page

If not, please register by filling in the following web form.

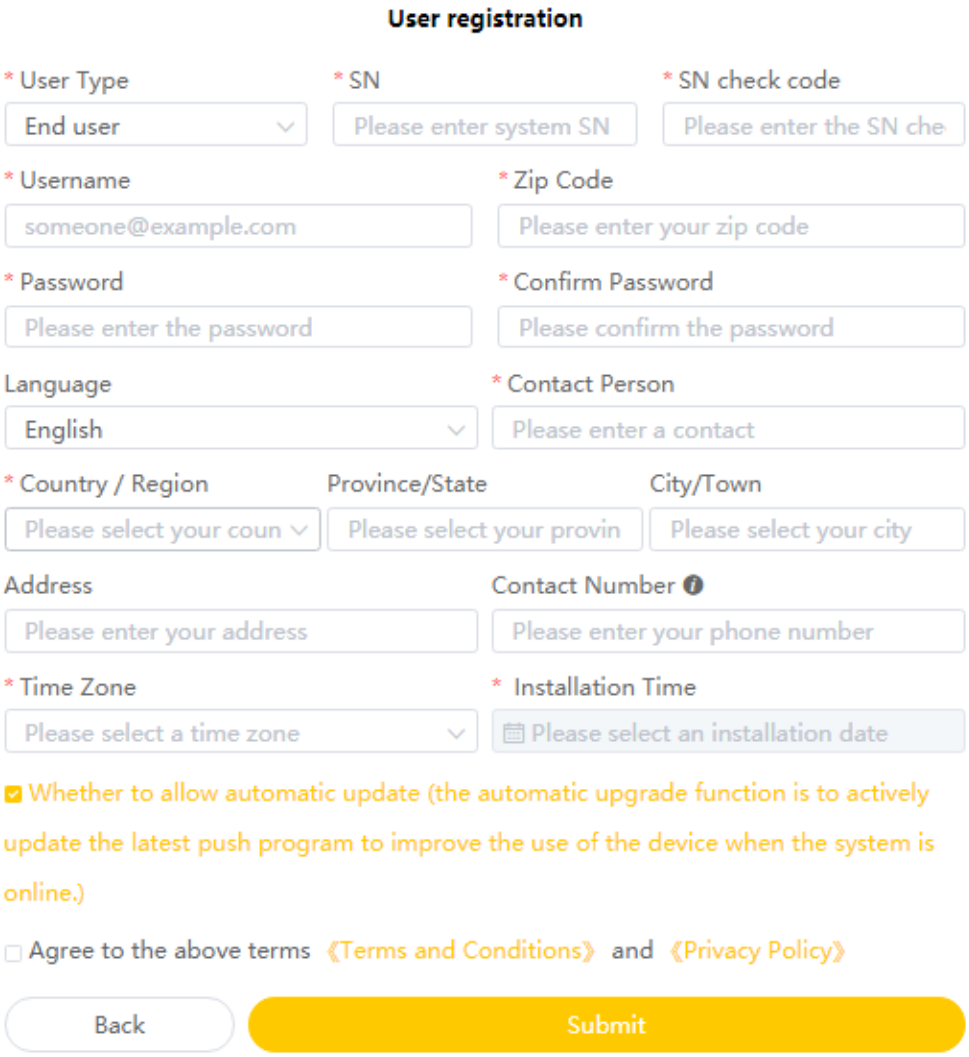

Figure 8-15 User registration

In this form, all fields with a red star are required.
***Serial Number:** SN (please see the type label of the inverter)
***Username:** 5-15 letters / numbers
***Password:** 5-15 letters / numbers / characters
More details are available in the Online Monitoring Web Server Installers User Manual, which can be downloaded from the AlphaESS homepage.

8.5.2. Install New System on AlphaCloud

Installers who haven't yet registered need to click “Register” to visit the registration page. Please refer to the “AlphaCloud Online Monitoring Web Server Installers User Manual”, which you can get from the Alpha sales team and get a Alpha Installer license number.

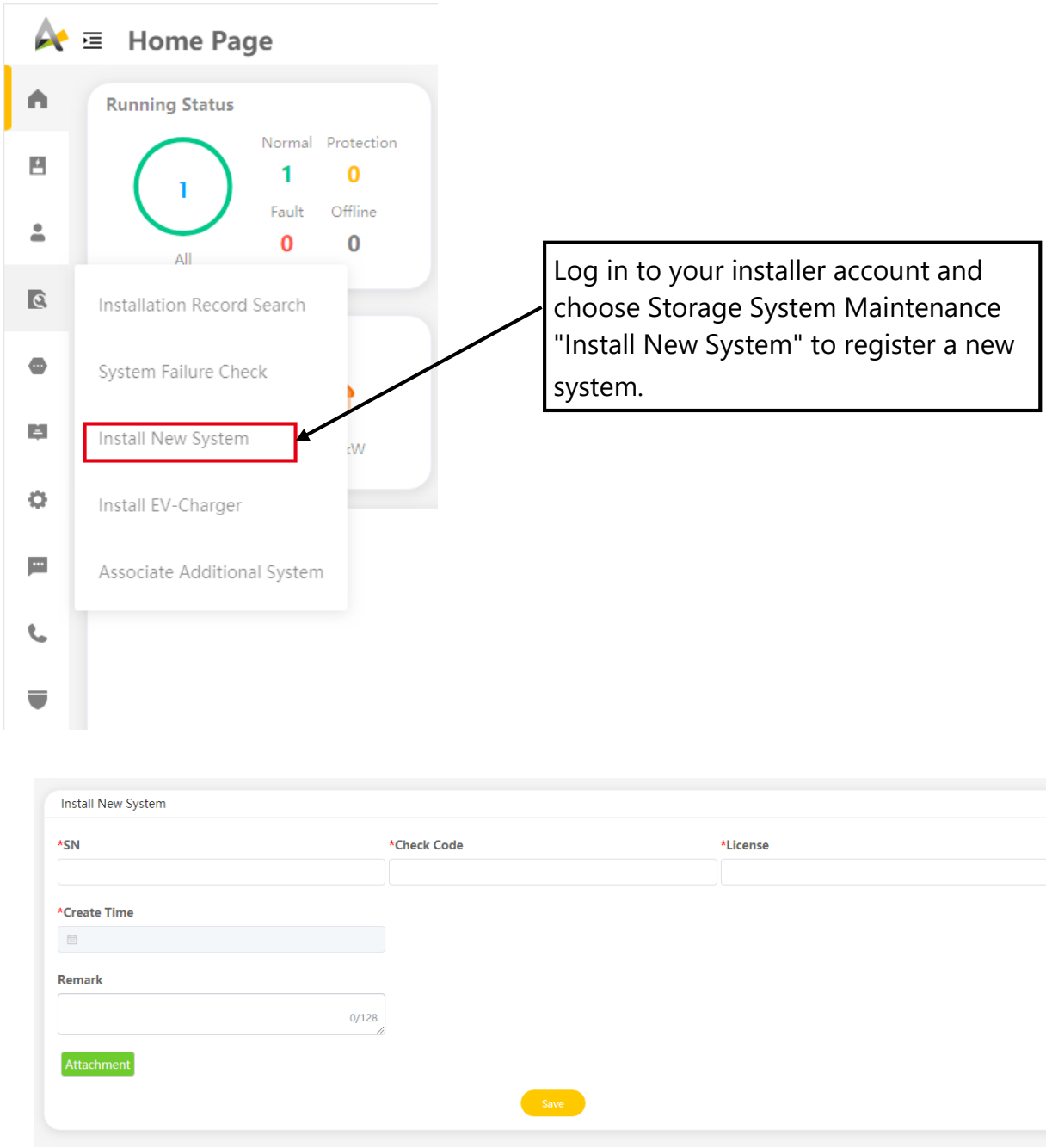

Figure 8-16 Install the new system on the Alpha Cloud platform

Enter the system S/N, check the code, license, and installation date, then click the “Save” button. The red * indicated a required field. Click the “Browse” button to select any attachment you want to add.

8.6. Check System Wiring and Meter Installation

Check the grid's voltage range and frequency range and the installation (including location, direction and phase sequence) of all CT(s) and/or meter(s).

You can commission the system after the system configuration process.

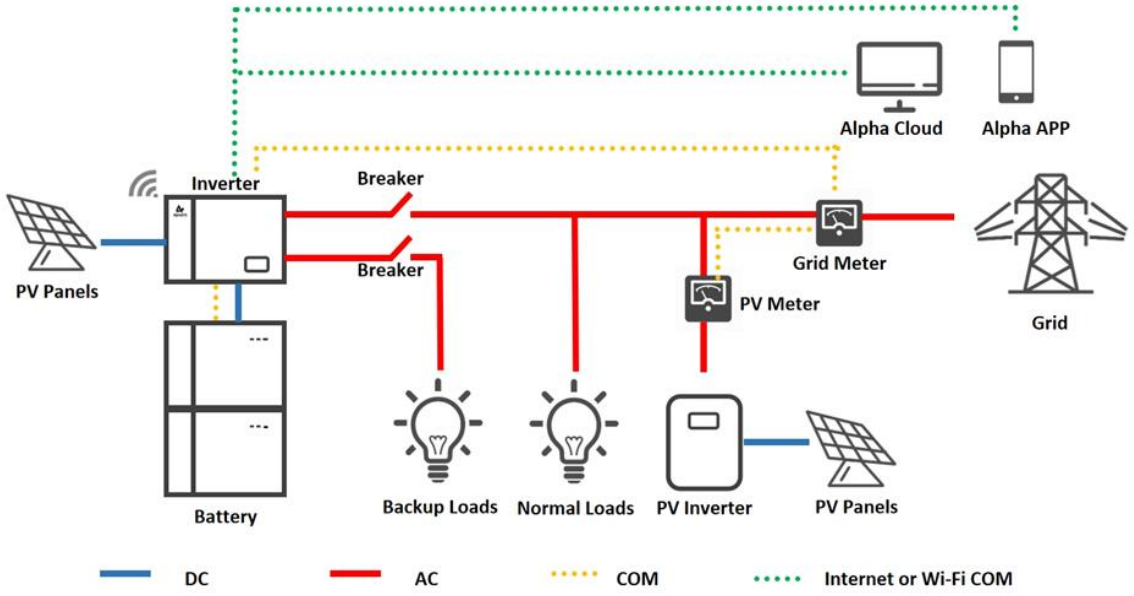

Figure 8-17 Brief wiring diagram of hybrid system

8.7. Meter Setting

8.7.1. Meter Setting on Alpha Cloud

Step 1:

When the system work mode is selected as “DC”, click the slider under the item “Grid Meter” to turn the “Meter” icon orange.

When the system work mode is selected as “AC” or “Hybrid”, click the sliders under the items “Grid Meter” and “PV side meter” to turn the “Meter” icons orange.

Step 2:

Click "Save" and wait a few minutes to refresh the page.

When the “Meter Model” displays DTSU666 model, the setting is successful.

CAUTION

Do not modify the “Meter CT Ratio”.

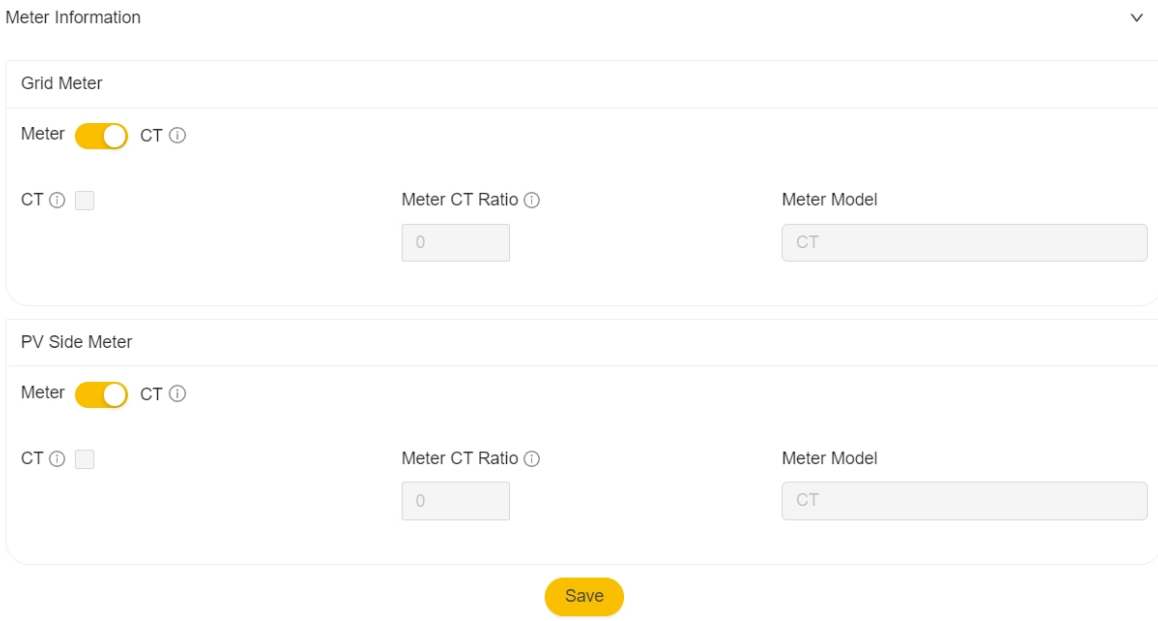

Figure 8-18 Electricity meter Settings in AlphaCloud

8.7.2. Meter Setting on the AlphaESS App

Step 1:

When the system work mode is selected as “DC”, only tick the "Meter" icon on the right of the “Grid Meter”.

When the system work mode is selected as “AC” or “Hybrid”, tick the two "Meter" icons on the right of the “Grid Meter” and the “PV Meter”.

Step 2:

Click "Submit" and enter the “System information” page to check the meter model. When the “Meter Model” displays DTSU666 model, the setting is successful.

CAUTION

Do not modify the “CT” ratio.

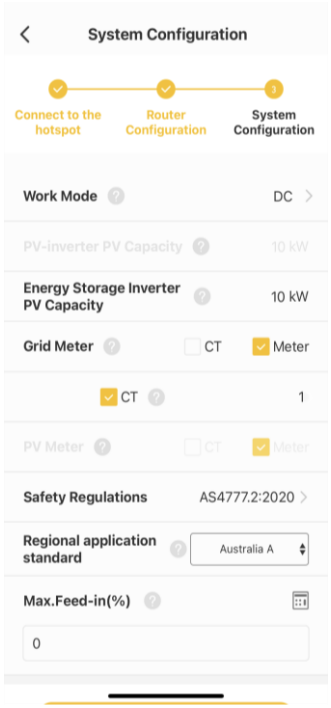

Figure 8-19 Electricity meter Settings in Alpha ESS App

9. Maintenance and Troubleshooting

9.1. Routine Maintenance

Normally, the energy storage system needs no maintenance or calibration.

However, in order to maintain the accuracy of the SOC, it is recommended to perform a full charge calibration for SOC (charge the battery until the charge power is 0W) on the battery at regular intervals (such as two weeks).

Before cleaning, ensure that the system is disconnected from all power sources. Clean the housing, cover and display panel with a soft cloth.

To ensure that the energy storage system can operate properly in the long term, it is advised to perform routine maintenance as described in this chapter.

Maintenance Checklist

Check Item	Acceptance Criteria	Maintenance Interval
Product cleanliness	The enclosure of the inverter should be free from obstacles or dust.	Once every 6 to 12 months
Product visible damage	The product should be not damaged or deformed.	Once every 6 months
Product running status	1. The product should operate without any abnormal sound. 2. All parameters of the product should be set correctly. Perform this check when the product is running.	Once every 6 months
Electrical connections	1. Cables should be securely connected. 2. Cables should be intact, and in particular, the cable jackets touching the metallic surface should not be scratched. 3. Unused cable glands should be blocked by rubber sealing which are secured by pressure caps. 4. The connections of the modules are secured. 5. LEDs are operating accordingly.	Perform the first maintenance 6 months after the initial commissioning. Thereafter, perform the maintenance once every 6 to 12 months.

CAUTION

Risk of burns due to hot enclosure of the inverter

The enclosure of the inverter can get hot during operation.

- Do not touch any parts other than the display panel during operation.
- Wait approximately 30 minutes for the inverter to cool down before cleaning.

9.2. Troubleshooting

9.2.1. Common Errors

Communication Troubleshooting

LED Indictor	Error Code	LED Display	Description	Troubleshooting
SYS red light is flashing fast (100 ms)	4	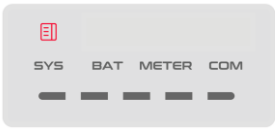	Inverter lost	Inverter communication lost 1. Restart the system. 2. Contact customer service to remotely update the inverter program. 3. If the error persists, contact customer service for further check.
SYS red light is glowing. In DC mode, METER light is off if Grid meter lost. In AC or Hybrid mode, METER light is flashing fast (200 ms) if Grid meter lost; METER light is flashing slow (500 ms) if PV meter lost; METER light is off if all meters lost.	5	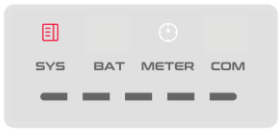	Grid meter lost	Grid side meter lost 1. Check whether the system configuration parameters of AlphaESS APP or Alphacloud are correct and whether the meter is used on the grid side 2. Check whether the communication cable of the grid meter is connected correctly (RS485：3A6B). 3. Check whether the communication configuration parameters of the grid meter are correct (communication address and baud rate). 4. If the error persists, contact customer service for further check.
	6	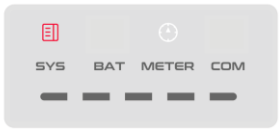	PV meter lost	PV inverter side meter lost 1. Check whether the system configuration parameters of AlphaESS APP or Alphacloud are correct and whether the meter is used on the PV inverter side 2. Check whether the communication cable of the meter of PV inverter side is connected correctly (RS485：3A6B). 3. Check whether the communication configuration parameters of the meter on the PV inverter side are correct (communication address and baud rate). 4. If the error persists, contact customer service for further check
SYS red light is glowing. BAT light is off.	7		BMS lost	BMS lost 1. Check whether the BMS communication connection between the battery and the inverter is correct. 2. Check if the battery is switched on. 3. If the error persists, contact service for further check.

Battery Error Troubleshooting

LED Indictor	Error Code	LED Display	Description	Troubleshooting
SYS red light is glowing.	60002		Circuit_Breaker_Open	Try to switch on the circuit breakers of all batteries. If the error persists, contact customer service for further check.
	60004		Follower_Battery_ Communication_Lost	Contact customer service for further check.
	60006		Host_Battery_Communication_Lost	
	60008		Multi_Master_error	

Inverter Error Troubleshooting

LED Indictor	Error Code	LED Display	Description	Troubleshooting
SYS red light is flashing fast (100 ms)	100005	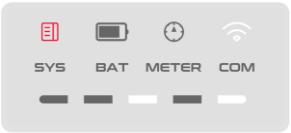	BUS_OVP1	1. Check whether the PV input voltage of PV1 and PV2 exceeds 580V. If there is no PV input overvoltage, restart the inverter. If the error persists, contact customer service for further check.
	100007		Insulation_ fault	1. Check whether PV cable connection is reliable. 2. Check whether PV cable is damaged. If the error persists, contact customer service for further check.
	100008		GFCI_fault	1. Restart inverter and check whether the error persists. If it so, please call customer service.

	100010		Grid_relay_ fault	
	100011	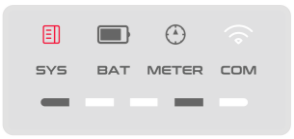	Over_ Temperature	1. Check whether the environment around inverter has poor heat dissipation. 2. Confirm whether inverter installation meets the installation requirements.
	100012	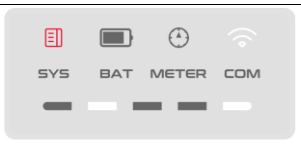	PV_Reverse	1.Check whether the PV terminal of the inverter is reversed. If the connection of PV terminals is right and the error persists, please call customer service.
	100013	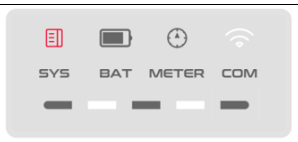	BAT_Reverse	1.Check whether the BAT terminal of the inverter is reversed. If the connection of BAT terminals is right and the error persists, please call customer service.
	100025	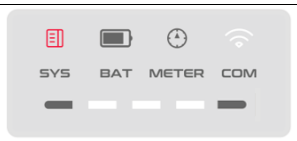	BAT_OVP	Check whether the actual battery voltage exceeds the battery charge cut-off voltage by more than 20V.
	100026		BAT_UVP	1. Check whether the actual battery voltage is lower than the battery discharge cut-off voltage. If the error persists, contact customer service for further check.
	100027	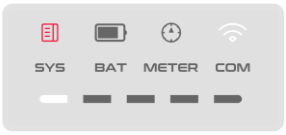	Battery_lose	1. Confirm whether the battery communication cable connection is normal. 1. Check whether the battery voltage sampling value is less than 75V. If the error persists, contact customer service for further check.
	100042	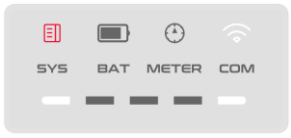	Output_short_circuit	1. Use a multimeter to test the impedance of the off-grid output. If it is low, check whether the wiring is correct. 2. Restart the inverter. If the error persists, contact customer service for further check.
	100043	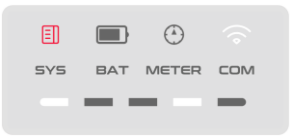	Output_ overload	1. Check whether the load exceeds the rated power. 2. Restart the inverter. If the error persists, contact customer service for further check.
	100052		Backup_ovp	1. Restart the inverter. If the error persists, contact customer service for further check.

9.2.2. Battery Protection Description for Series Battery

The four LED indicators on the front cover provide information about the protection status of the battery.

 : Yellow LEDs flashing

 : Yellow LEDs on

 : Yellow LEDs off

LED Display State	Description	Troubleshooting
	High temperature	Stop discharging and charging until this display state is eliminated and wait for the temperature to drop.
	Low temperature discharge	Stop discharging until this display state is eliminated and wait for the temperature to rise.
	Overcurrent charge	Wait for automatic recovery. If this protection state persists, please call customer service.
	Overcurrent discharge	Wait for automatic recovery. If this protection state persists, please call customer service.
	Cell under voltage	Stop discharging and call customer service immediately.
	Serious undervoltage of individual units	Please contact the after-sales personnel for power replenishment.
	Low temperature charge	Stop charging until this protection state is eliminated and wait for the temperature to rise.

NOTICE

During work mode, if the protection status "Cell under voltage"  or  appears, please take the following action:

please press the power button of the battery 5 times within 10 seconds, the BMS will be forced to turn on the MOSFET of discharge so that the inverter can detect the battery's open

voltage and begin charging the battery.

9.2.3. Battery Error Description

The four LED indicators on the front cover provide information about the error status of the battery.

 : Yellow LEDs flashing

 : Yellow LEDs on

 : Yellow LEDs off

LED Display State	Description	Troubleshooting
	Hardware error	Wait for automatic recovery. If this error persists, please call customer service.
	Hardware error	
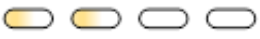	Circuit breaker open	Switch on circuit breaker after powering off the battery.
	LMU disconnect (follower)	Reconnect the BMS communication cable.
	SN missing	Please call customer service.
	LMU disconnect (host)	Reconnect the BMS communication cable.
	Multi-host	Restart all batteries.
	MOS over temperature	Power off the battery and power on the battery after 30 minutes.
	Battery self-locking	Please contact the after-sales personnel.

10. Product Removal & Return

WARNING

After the energy storage system is powered off, the remaining electricity and heat may still cause electric shocks and body burns. Please put on protective gloves and remove the product 5 minutes after the system is powered off.

10.1. Removing the Product

Procedure

Step 1: Power off the energy storage system as described in Chapter 7.2 Powering off the System.
Step 2: Disconnect all cables from the system, including communication cables, PV power cables, battery power cables, AC cables, and PE cables.
Step 3: Remove the Wi-Fi module.
Step 4: Remove the cable covers of the inverter.
Step 5: Remove the inverter from the top of the battery.
Step 6: Remove the batteries.
Step 7: Remove the battery wall brackets.

10.2. Packing the Product

If the original packaging is available, put the product inside it and then seal it using adhesive tape.

If the original packaging is not available, put the product inside a suitable cardboard box and seal it properly.

10.3. Disposing of the Product

If the product's service life expires, dispose of it according to the local disposal rules for electrical equipment and electronic waste.

Dispose of the packaging and replaced parts according to the rules at the installation site where the device is installed.

Do not dispose the product with regular household waste.



11. Technical Data

11.1. Datasheet of SMILE-M10/M9/M8-S Single Phase Inverter

Item	SMILE-M10-S-INV	SMILE-M9-S-INV	SMILE-M8-S-INV
PV side			
Max. PV Input Power	20000 W	18000 W	16000 W
Max. PV Input Voltage	600 V		
Rated Voltage	360 V		
Start-up Voltage	70 V		
MPPT Voltage Range	60 to 550 V		
MPPT Number	4		
Max. Input Strings Number per MPPT	1		
Max. Input Current per MPPT	20 / 20 / 20 / 20 A		
Max. Short Circuit Current per MPPT	30 / 30 / 30 / 30 A		
Backfeed Short-Circuit Current	0 A		
Battery Side			
Battery Type	LFP ($LiFePO_4$)		
Battery Voltage Range	40 to 60 V		
Max. Continuous Charge / Discharge Power	11 kW	9.9 kW	8.8 kW
Max. Continuous Charge / Discharge Current	210 A	210 A	210 A
Max. Short-Circuit Current	420 A		
Backfeed Short-Circuit Current	420 A		
Grid Side			
Rated Grid Voltage	L/N/PE, 220, 230 V		
Grid Input Voltage Range	195.5 to 253 V		
Rated frequency	50 / 60 Hz		
Max. Input Power	14.49 kW	14.49 kW	14.49 kW
Max. Input Apparent Power	14.49 kVA	14.49 kVA	14.49 kVA
Max. Input Continuous Current	63 A	63 A	63 A
Rated Output Power	9.999 kW	9 kW	8 kW
Max. Continuous Output Power	9.999 kW	9 kW	8 kW
Rated Output Current	43.4 A	39.1 A	34.7 A

Max. Continuous Output Current	43.4 A	39.1 A	34.7 A
Rated Output Apparent Power	9.999 kVA	9 kVA	8 kVA
Max. Continuous Output Apparent Power	9.999 kVA	9 kVA	8 kVA
Max. Output Fault Current	105 A		
Max. Output overcurrent protection Current	70 A		
Backfeed Short-Circuit Current	0 A		
Backup Side			
Rated Output Voltage	L/N/PE, 230 V		
Rated Frequency	50 / 60 Hz		
Rated Output Power	10 kW	9 kW	8 kW
Max. Continuous Output Power	10 kW	9 kW	8 kW
Rated Output Apparent Power	10 kVA	9 kVA	8 kVA
Max. Continuous Output Apparent Power	10 kVA	9 kVA	8 kVA
Rated Output Current	43.4 A	39.1 A	34.7 A
Max. Continuous Output Current	43.4 A	39.1 A	34.7 A
Max. AC Input Power	14.49 kW	14.49 kW	14.49 kW
Backfeed Short-Circuit Current	70 A		
General data			
Operation Phase	Single phase		
Power Factor Range	>0.99 (0.8 leading to 0.8 lagging)		
Noise	<45 dB(A) @ 1 m		
Weight	35.5 ± 1 kg		
Warranty	10 Years		
Topology	Non-isolated		
Communication	LAN, Wi-Fi, Bluetooth		
Dimensions (W*D*H)	620 * 239.5 * 570 mm (with cable cover) 435 * 239.5 * 570 mm (without cable cover)		
Cooling Type	Smart Fan Cooling		
Humidity Range	0~100% (No Condensation)		
Pollution Degree	PD3 (Outside)		
Protection Class	Class I		

Ingress protection	IP65 (Outdoor)
Overvoltage Category	BAT, PV II Grid, Backup lll
Max. Operation Altitude	2000 m
Operation Temperature Range	-25 to +60°C (derating > 40℃)*
Max. Efficiency, ηmax	≥97.47%
Firmware version	V1.01

*At full PV load, the derating ambient temperature is specified as 28℃

11.2. Datasheet of SMILE-M5/M3.6-S&M5-B Single Phase Inverter

Item	SMILE-M5-S-INV	SMILE-M3.6-S-INV	SMILE-M5-B-INV
PV side			
Max. PV Input Power	10000 W	7360 W	N/A
Max. PV Input Voltage	550 V		N/A
Rated Voltage	360 V		N/A
Start-up Voltage	70 V		N/A
MPPT Voltage Range	100 to 550 V		N/A
MPPT Number	2		N/A
Max. Input Strings Number per MPPT	1		N/A
Max. Input Current per MPPT	16 / 16 A		N/A
Max. Short Circuit Current per MPPT	25 / 25 A		N/A
Backfeed Short-Circuit Current	0 A		N/A
Battery Side			
Battery Type	LFP ($LiFePO_4$)		
Battery Voltage Range	40 to 60 V		
Max. Continuous Charge / Discharge Power	5 kW	3.68 kW	5 kW
Max. Continuous Charge / Discharge Current	100 A	100 A	100 A
Max. Short-Circuit Current	125 A		
Backfeed Short-Circuit Current	125 A		
Grid Side			
Rated Grid Voltage	L/N/PE, 220, 230 V		
Grid Input Voltage Range	195.5 to 253 V		
Rated frequency	50 / 60 Hz		
Max. Input Power	5 kW	3.68 kW	5 kW
Max. Input Apparent Power	5 kVA	3.68 kVA	5 kVA
Max. Input Continuous Current	21.7 A	16 A	21.7 A
Rated Output Power	5 kW	3.68 kW	5 kW
Max. Continuous Output Power	5 kW	3.68 kW	5 kW
Rated Output Current	21.7 A	16 A	21.7 A

Max. Continuous Output Current	21.7 A	16 A	21.7 A
Rated Output Apparent Power	5 kVA	3.68 kVA	5 kVA
Max. Continuous Output Apparent Power	5 kVA	3.68 kVA	5 kVA
Max. Output Fault Current	65 A		
Max. Output overcurrent protection Current	41 A		
Backfeed Short-Circuit Current	0 A		
Backup Side			
Rated Output Voltage	L/N/PE, 230 V		
Rated Frequency	50 / 60 Hz		
Rated Output Power	5 kW	3.68 kW	5 kW
Max. Continuous Output Power	5 kW	3.6 kW	5 kW
Rated Output Apparent Power	5 kVA	3.68 kVA	5 kVA
Max. Continuous Output Apparent Power	5 kVA	3.68 kVA	5 kVA
Rated Output Current	21.7 A	16 A	21.7 A
Max. Continuous Output Current	21.7 A	16 A	21.7 A
Max. AC Input Power	5 kW	3.68 kW	5 kW
Backfeed Short-Circuit Current	38 A		
General data			
Operation Phase	Single phase		
Power Factor Range	>0.99 (0.8 leading to 0.8 lagging)		
Noise	<35 dB(A) @ 1 m		
Weight	21.3 ± 1 kg		
Warranty	10 Years		
Topology	Non-isolated		
Communication	LAN, Wi-Fi, Bluetooth		
Dimensions (W*D*H)	620 * 240 * 423.5 mm		
Cooling Type	Natural Cooling		
Humidity Range	0~100% (No Condensation)		
Pollution Degree	PD3 (Outside)		
Protection Class	Class I		
Ingress protection	IP65 (Outdoor)		

Overvoltage Category	BAT, PV II Grid, Backup lll	BAT II Grid, Backup lll
Max. Operation Altitude	2000 m	
Operation Temperature Range	-25 to +60°C (derating > 40℃)*	
Max. Efficiency, ηmax	≥97.47%	
Firmware version	V1.01	

*At full PV load, the derating ambient temperature is specified as 28℃

11.3. Datasheet of Battery

11.3.1. Datasheet of Battery SMILE-M-BAT-13.9P

Model	SMILE-M-BAT-13.9P	SMILE-M-BAT-13.9P II
Battery Type	LFP ($LiFePO_4$)	
Battery Module	13.9 kWh, 108 kg	
Modules Connection	1	2
Usable capacity	13.99 kWh	27.98 kWh
Weight	108 kg	216 kg
Dimension (W*D*H)	620 * 240 * 710 mm	620 * 240 * 710 mm and 620 * 240 * 710 mm
Nominal voltage	48 V	
Operating voltage range	45 to 54 V	
Max. charge current*	105 A	210 A
Max. discharge current*	105 A	210 A
Monitoring parameters	System voltage, current, cell voltage, cell temperature, PCBA temperature	
BMS communication	CAN	
General Date		
Environmental Category	Outdoor	
Ingress protection	IP65	
Pollution degree	PD3 (internal reduced to PD2)	
Operating temperature range	Charge：0＜T≤50℃ Discharge：-10＜T≤50℃	
Relative Humidity	0 ~ 100% (No condensation)	
Max. Operation Altitude	2000 m	
Safety	IEC 62619, IEC 62040, IEC 61000-6-1/3	
Transportation	UN38.3	
Warranty	10 Years Warranty	

* Max. charge/discharge current derating may occur with changes in temperature and SOC, and will be limited by the ability of SMILE-M5/M3.6-S&M5-B inverter which is 100 A

Appendix 1: System Wiring Diagram

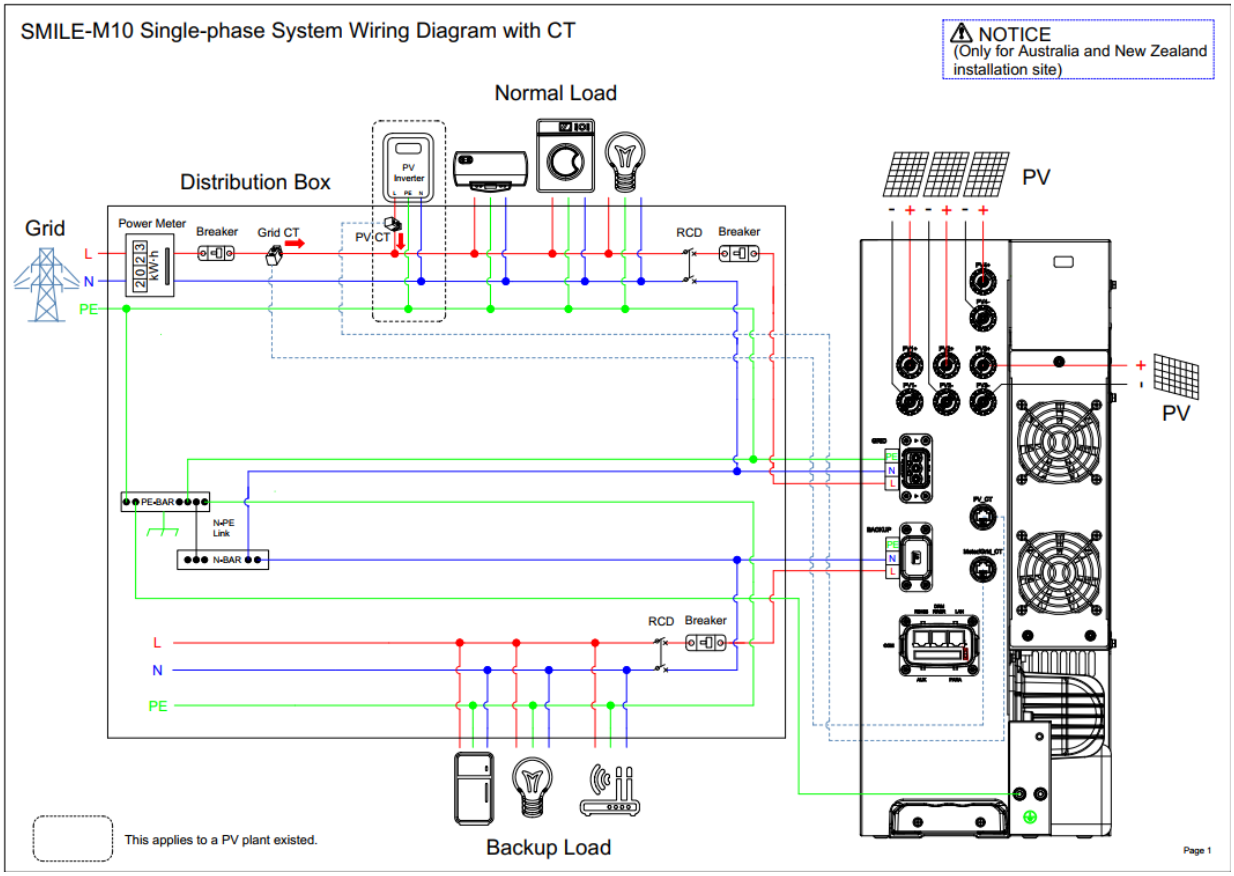

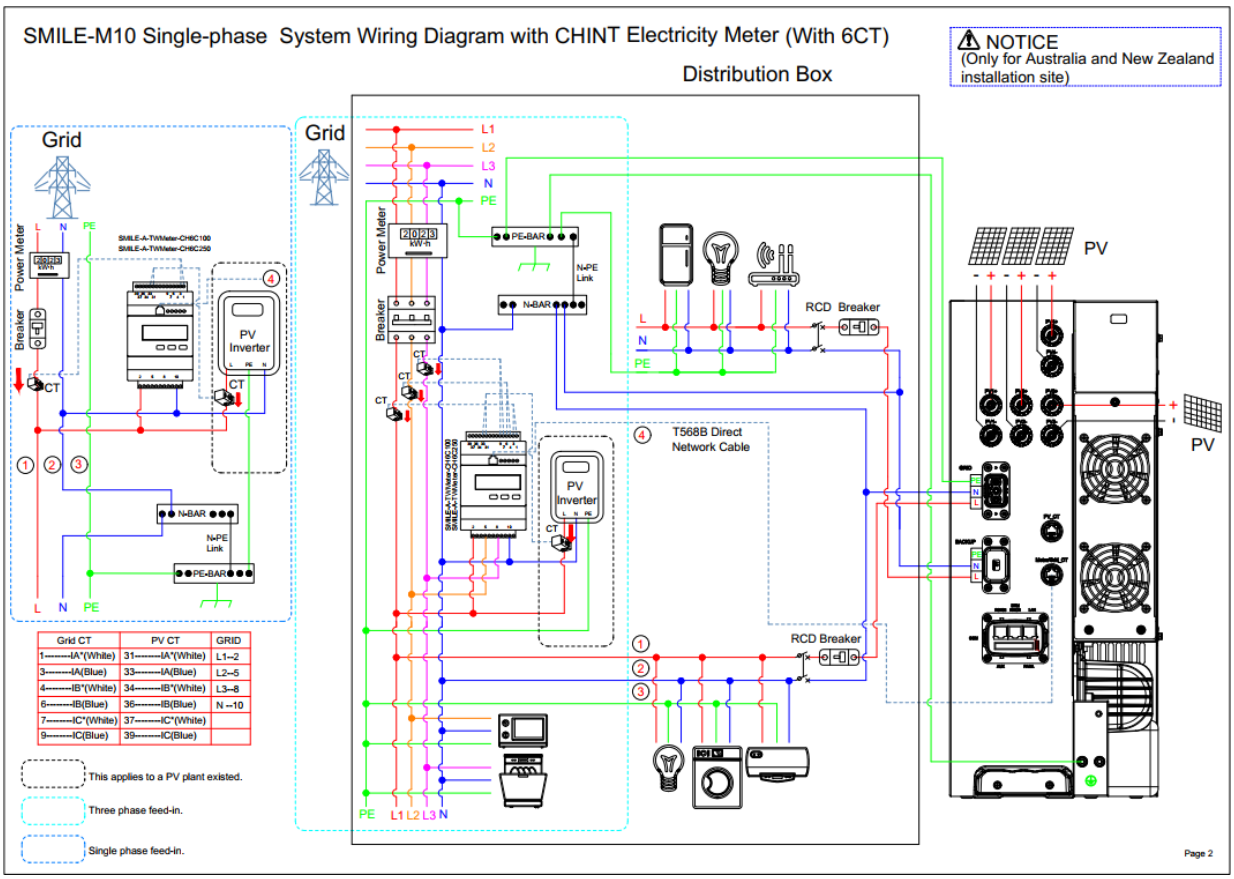

SMILE-M10 Single-phase Whole Home Backup System Wiring Diagram with CT

NOTICE
(Only for Australia and New Zealand installation site)

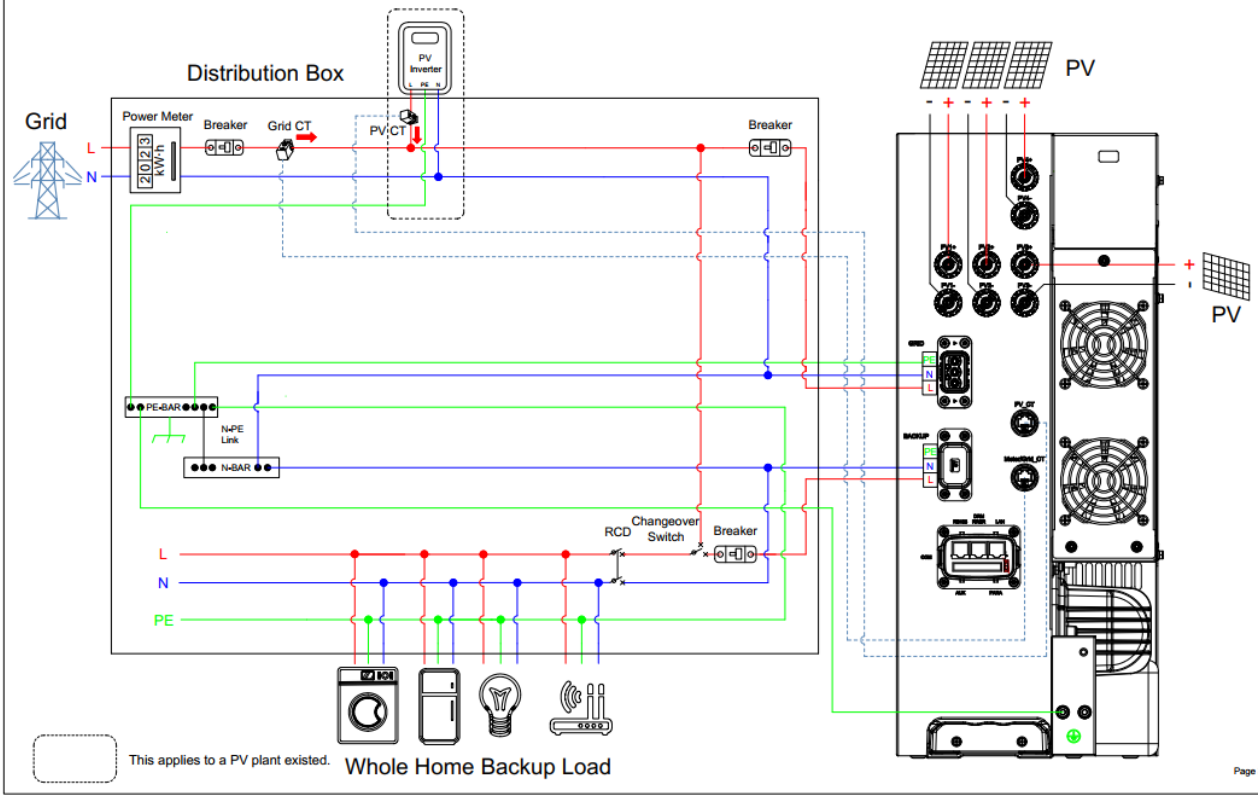

Page 3

SMILE-M10 Single-phase Whole Home Backup System Wiring Diagram with CHINT Electricity Meter (With 6CT)

NOTICE
(Only for Australia and New Zealand installation site)

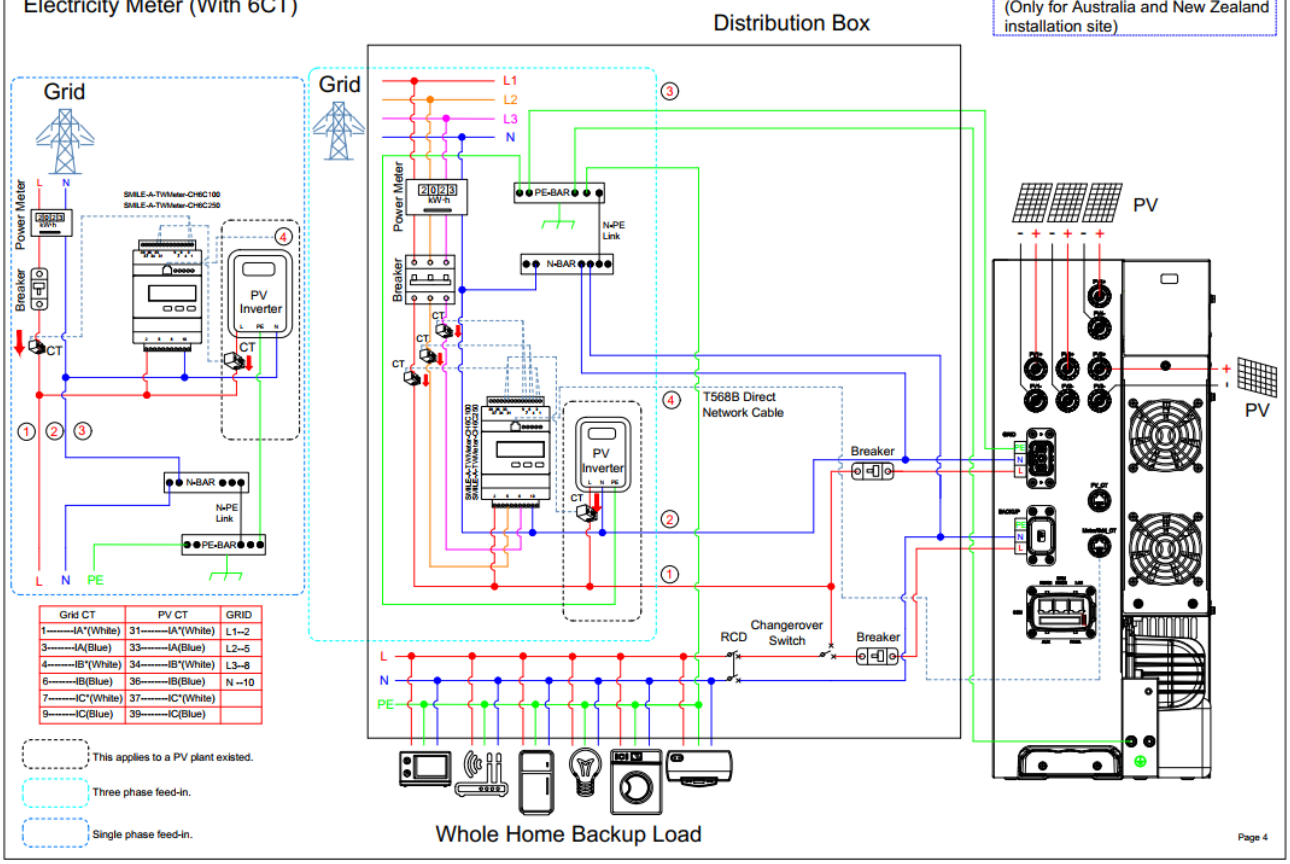

Grid CT	PV CT	GRID
1--------IA*(White)	31--------IA*(White)	L1--2
3--------IA(Blue)	33--------IA(Blue)	L2--5
4--------IB*(White)	34--------IB*(White)	L3--8
6--------IB(Blue)	36--------IB(Blue)	N --10
7--------IC*(White)	37--------IC*(White)	
9--------IC(Blue)	39--------IC(Blue)	

This applies to a PV plant existed.
Three phase feed-in.
Single phase feed-in.

Page 4

SMILE-M5-S-INV Single-phase System Wiring Diagram with Backup Box Plus

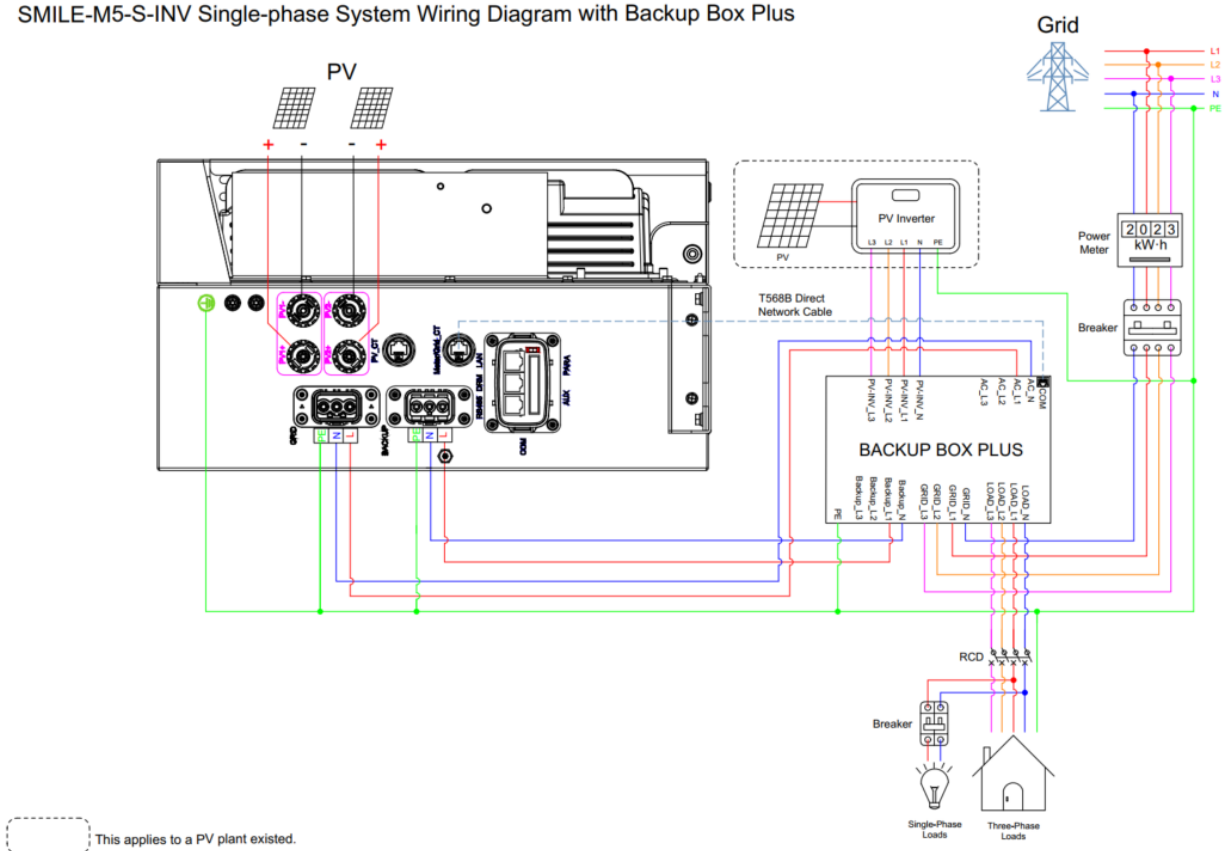

Page 1

SMILE-M5-S-INV Single-phase System Wiring Diagram with Backup Box Plus (Heavy Load)

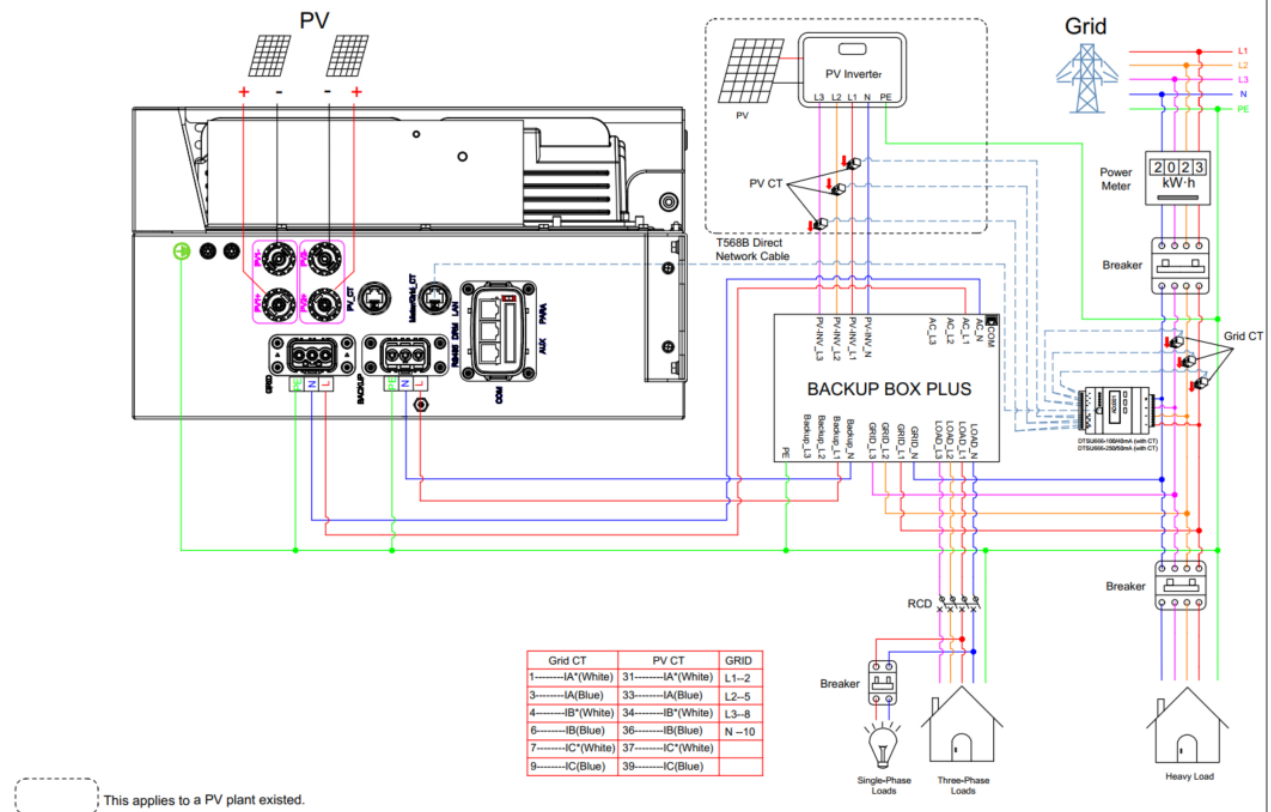

Grid CT	PV CT	GRID
1---------IA*(White)	31---------IA*(White)	L1--2
3---------IA(Blue)	33---------IA(Blue)	L2--5
4---------IB*(White)	34---------IB*(White)	L3--8
6---------IB(Blue)	36---------IB(Blue)	N --10
7---------IC*(White)	37---------IC*(White)	
9---------IC(Blue)	39---------IC(Blue)	

Page 2

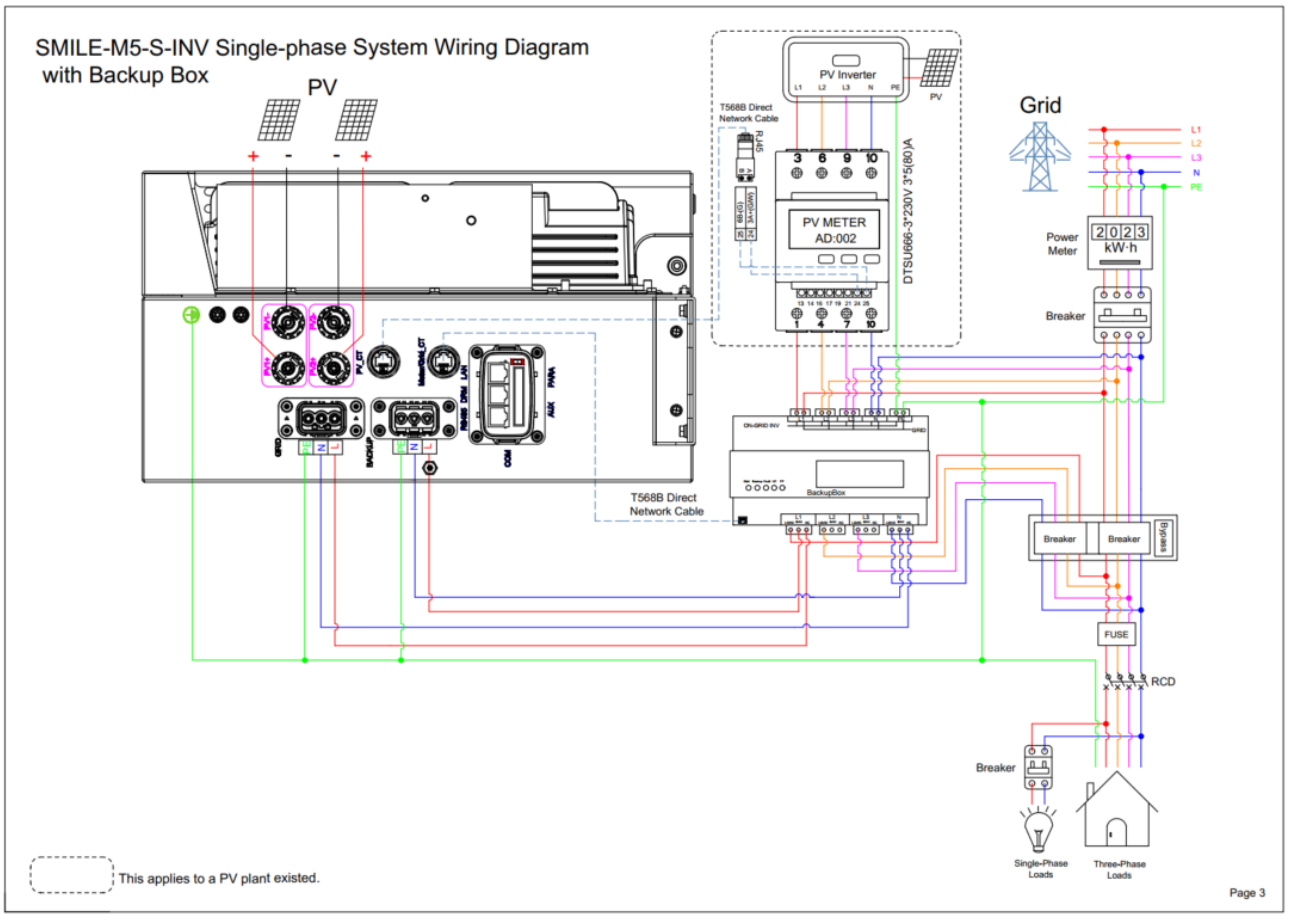
SMILE-M5-S-INV Single-phase System Wiring Diagram with Backup Box
PV
PV Inverter
T568B Direct Network Cable
PV METER AD:002
DTSU666-3*230V 3*5(80)A
Grid
Power Meter
Breaker
T568B Direct Network Cable
BackupBox
Breaker
Breaker
FUSE
RCD
Breaker
Single-Phase Loads
Three-Phase Loads
This applies to a PV plant existed.
Page 3

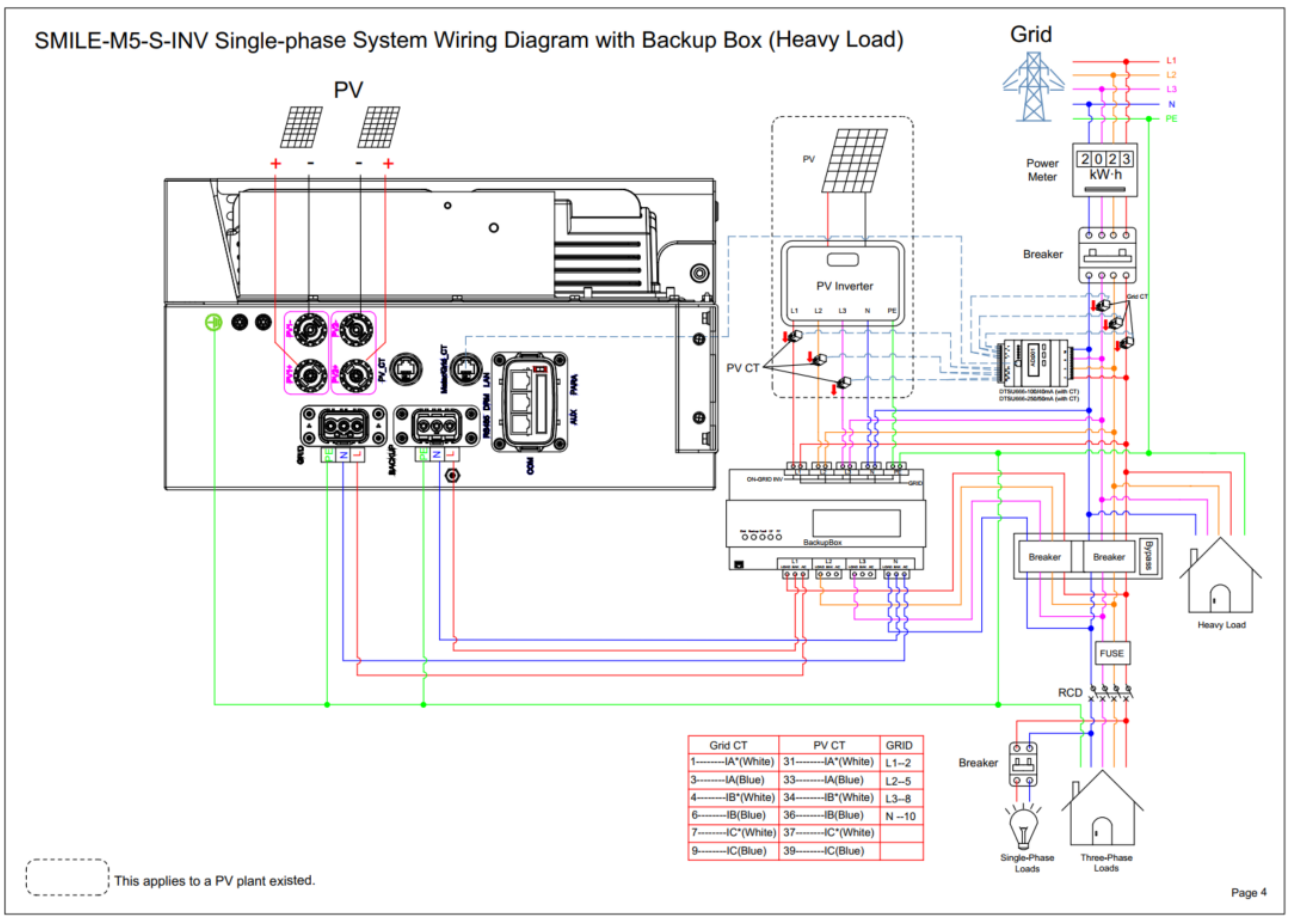
SMILE-M5-S-INV Single-phase System Wiring Diagram with Backup Box (Heavy Load)
PV
Grid
PV Inverter
PV CT
Power Meter
Breaker
BackupBox
Breaker
Breaker
Heavy Load
FUSE
RCD
Breaker
Single-Phase Loads
Three-Phase Loads
Grid CT | PV CT | GRID
1---------IA*(White) | 31---------IA*(White) | L1--2
3---------IA(Blue) | 33---------IA(Blue) | L2--5
4---------IB*(White) | 34---------IB*(White) | L3--8
6---------IB(Blue) | 36---------IB(Blue) | N --10
7---------IC*(White) | 37---------IC*(White)
9---------IC(Blue) | 39---------IC(Blue)
This applies to a PV plant existed.
Page 4

SMILE-M5-S-INV Single-phase System Wiring Diagram with CT

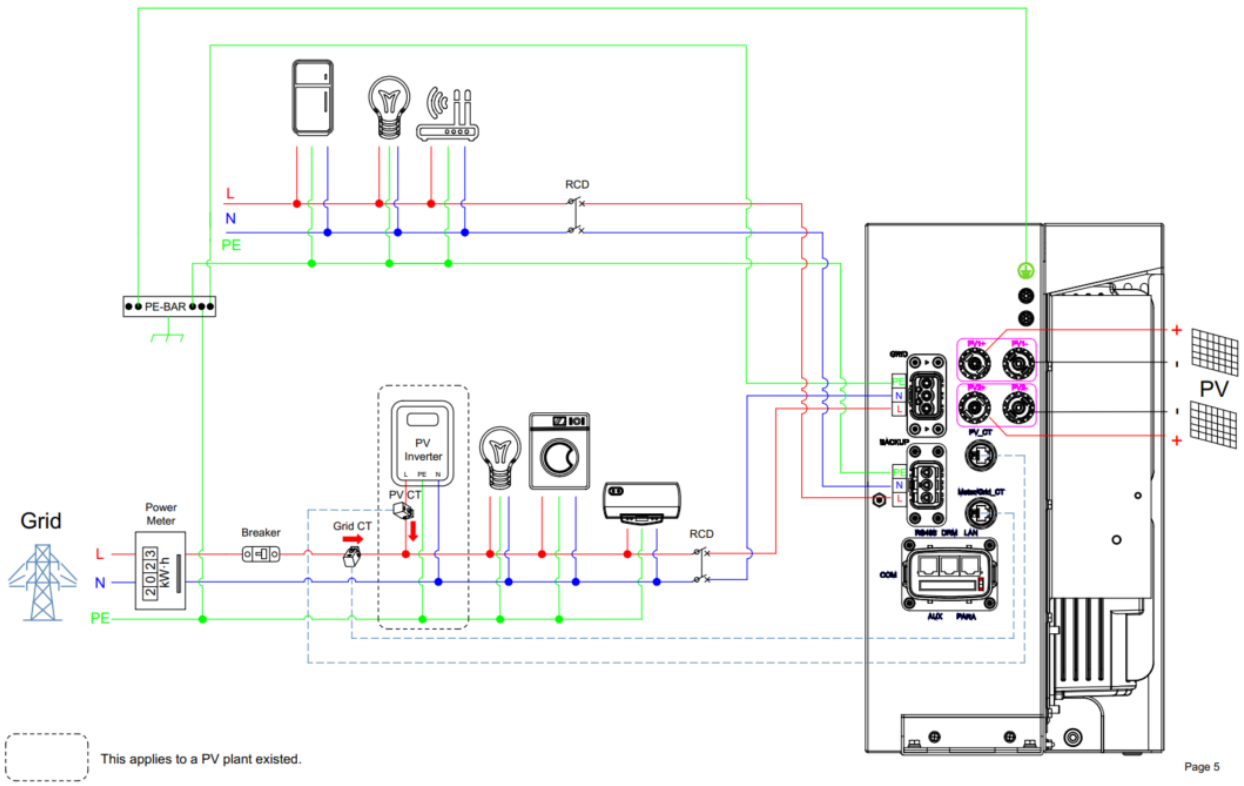

Page 5

SMILE-M5-S-INV Single-phase System Wiring Diagram with CHINT Electricity Meter DTSU666 (Without CT)

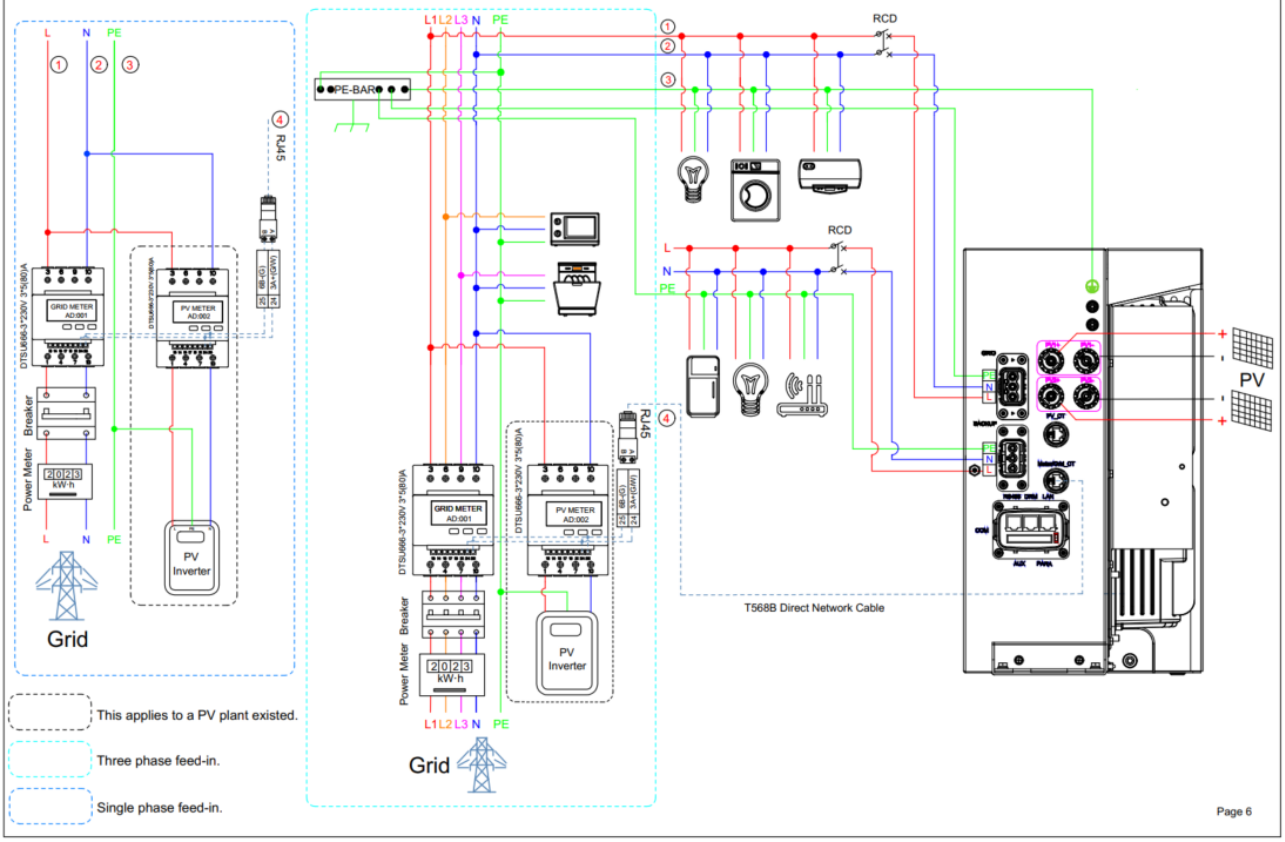

Page 6

SMILE-M5-S-INV Single-phase System Wiring Diagram with CHINT Electricity Meter DTSU666 (With CT)

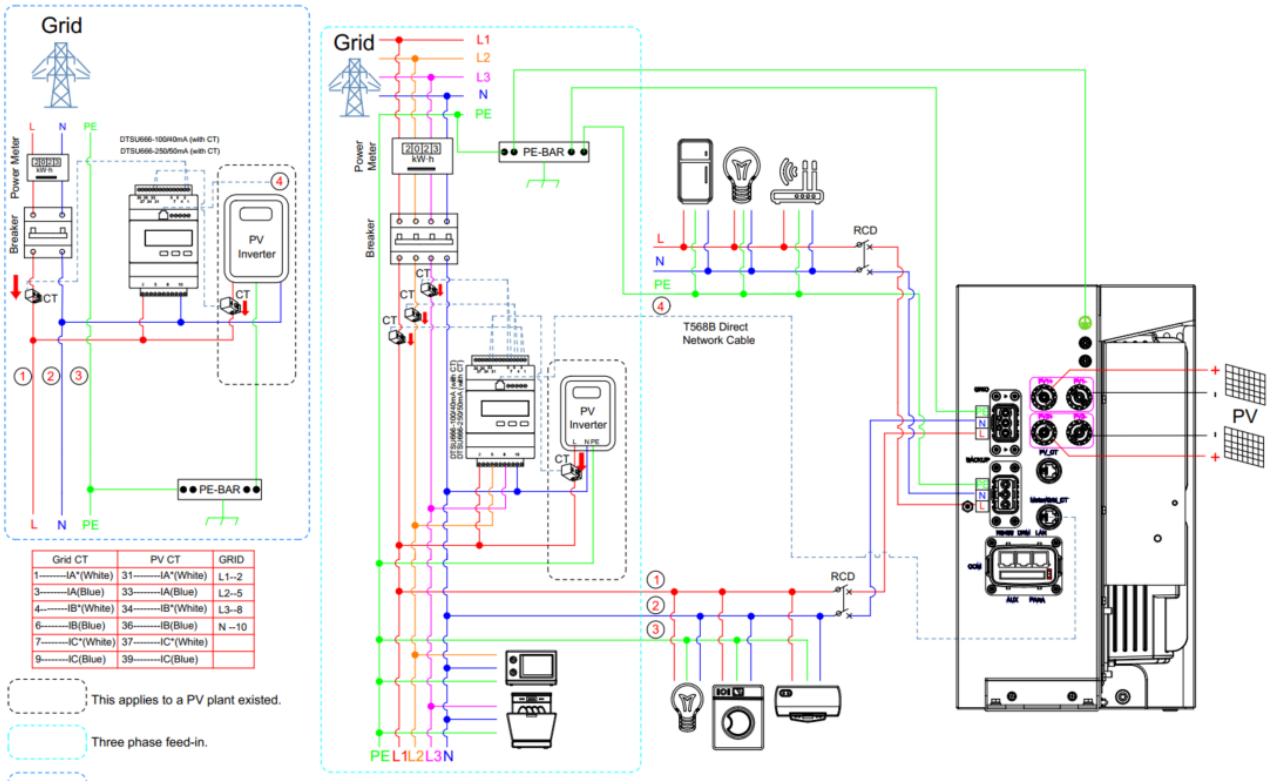

Grid CT	PV CT	GRID
1---------IA*(White)	31---------IA*(White)	L1--2
3---------IA(Blue)	33---------IA(Blue)	L2--5
4---------IB*(White)	34---------IB*(White)	L3--8
6---------IB(Blue)	36---------IB(Blue)	N --10
7---------IC*(White)	37---------IC*(White)	
9---------IC(Blue)	39---------IC(Blue)	

This applies to a PV plant existed.

Three phase feed-in.

Single phase feed-in.

Page 7

Appendix 2: Regional Application Standard

Please check with your local grid company and choose the corresponding regional application standard, the power quality modes Volt-VAR and Volt-Watt will be running automatically. (Only for regions with AS/NZW 4777.2 safety standard).

Regional application Standard	Electric Company
Australia A	N/A
Australia B	N/A
Australia C	N/A
New Zealand	N/A
Vector	New Zealand Vector

Appendix 3: Earth Fault Alarm Notification

If the system occurs an earth fault, the user will receive a mail like this to remind them check the grounding status:

Dear user,

Your system has an earth fault, the details are as follows:

SN	Status	Error Code	Update Time
AL7061024090001	Earth Fault	EMS:100008	25/9/2024 4:27:30 PM

Please contact your installer company to correct these faults.
This email is automatically sent by the system, please do not reply directly.

Sincerely,
Alpha ESS Co., Ltd.

@AlphaEnergyStorageSystem @AlphaESS @alpha_ess @AlphaESS www.alphaess.com

Alpha ESS Co., Ltd.
+86 513 8060 6891
info@alpha-ess.com
www.alphaess.com
No. 1086 Bihua Road, Tongzhou District, Nantong City, Jiangsu Province, China

Alpha ESS International Pte. Ltd.
+65 6513 1125 / +65 6513 1126
Singapore@alpha-ess.com
2 Corporation Road #01-06A Corporation Place 618494 Singapore

Alpha ESS Europe GmbH
+49 610 3459 1601
europe@alpha-ess.de
www.alphaess.de
Paul-Ehrlich-Straße 1a, Langen, Hessen D-63225 Germany

Alpha ESS Australia Pty. Ltd.
+61 02 9000 7676
techsupport@alphaess.au
www.alphaess.au
8/15-21 Gibbes Street, Chatswood, NSW 2067 Australia

Alpha ESS UK Co., Ltd
+44 330 043 2610
info@alpha-ess.com
Drake house, Long street, Dursley, gl11 4hh UK

Alpha ESS Italy S.r.l.
+39 339 462 4288
info@alphaess.it
www.alphaess.it
Via Del Molinuzzo 83, 59100 Prato (PO), Italy

Alpha ESS NZ Ltd.
+64 0800 769 377
info@alpha-ess.com
www.alpha-ess.co.nz
19 Arrenway Drive, Albany, 0630, New Zealand

Alpha ESS USA, Inc.
+1 800 220 0725 (Service Inquiries)
service@alphaess.us
www.alphaess.us
2180 S Ivanhoe St. Unit 5 Denver.CO 80222 USA

Alpha ESS South Africa (Pty.) Ltd.
+27 010 745 5653
measervice@alpha-ess.com
Johannesburg, South Africa

Alpha ESS Korea Co., Ltd
info@alpha-ess.com
2F, 19-4, Nohyeong 11-gil, Jeju-si, Jeju-do, Republic of Korea

Alpha ESS Japan, Inc.
info@alpha-ess.com
www.alphaess.jp